SUZUKI
PARTS & ACCESSORIES



2022
SUZUKI GENUINE MARINE PARTS & ACCESSORIES CATALOG

SUZUKI

PARTS & ACCESSORIES



Dear Customer,

The Suzuki Genuine Accessories Catalog provides information on the highest quality accessories, specific to your outboard engine and application. We strive to bring you only the highest quality parts to ensure your outboard will run flawlessly for years to come. We recommend only using Suzuki Genuine Accessories on your Suzuki outboard. We never compromise over quality and you shouldn't compromise your boating experience with anything but Suzuki Genuine Accessories. Suzuki is on the forefront of innovation and have the accessories to prove it. If you are thinking of bringing the foremost of technology to your boat, think Suzuki. Pair your Suzuki outboard with our dependable instruments and gauges, custom-engineered propellers, and durably designed rigging items for optimum performance and reliability. Take your time reading through our catalog, and don't hesitate to visit our website or an Authorized Suzuki Marine Dealer.

Thank you,

Suzuki Parts & Accessories

www.suzukimarine.com

TABLE OF CONTENTS


Suzuki Precision Control 2.0 4


Mechanical Controls 12


Multi-Function Gauge 14


Multi-Function Display 24

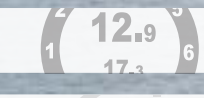
Suzuki C-10 Digital Gauge 26

Suzuki Precision Control 1.0 Legacy Product 27


Analog Instruments 28


Cables & Rigging 32


Steering 34


Fuel System 36


Propellers 38


DF300B & DF350 Propellers and Tools 42


Repair Kits & Anodes 44


Ecstar Oils & Chemicals 46


Maintenance & Care 50

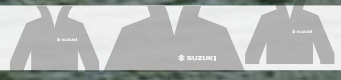
Engine Covers 54


Marine Style 56


Gifts & Collectibles 66

Application Chart 70

SUZUKI PRECISION CONTROL 2.0



New for 2022, Suzuki Precision Control 2.0 brings fresh new styling and features to your digital control.

Suzuki Precision Control 2.0 (S.P.C. 2.0) Electronic Throttle and Shift Systems

For DF115BG/140BG/150AP/175AP/200AP/250AP/300AP/300B/350A



Single Engine S.P.C. 2.0 Binnacle

67200-98L00	Single Engine S.P.C. 2.0 Binnacle Only



Multi-Engine S.P.C. 2.0 Binnacle

67200-98L10	Multi-Engine S.P.C. 2.0 Binnacle Only



Flush Mount S.P.C. 2.0 Control

67200-98L20	Flush Mount S.P.C. 2.0 Control Only

Suzuki Precision Maneuvering

Suzuki Precision Maneuvering

- Touch the future with Suzuki's Precision Maneuvering System and enjoy confident intuitive joystick control.
- Designed exclusively for Suzuki outboards with Suzuki Precision Controls, including the new DF115 and DF140 BG models as well as DF150AP, DF175AP, DF200AP, DF250AP, DF300AP, DF300B, and DF350A.
- Experience parallel parking without a thruster.
- Confidently pilot your boat around crowded docks, at waterfront restaurants and at the launch ramp.
- Now available for twin, triple, and quad installations.
- **See your Local Authorized Suzuki SeaStar Installation Center for more details.**



SUZUKI PRECISION CONTROL 2.0 COMPONENTS

1 Binnacle Mount R/C Box | Flush Mount R/C Box



2 Control Panels



3 Buzzer



4 Boat Control Module (BCM)



5 Terminal Resistor



6 Battery Lead Wire



7 BCM #1 Wiring Harness



8 Emergency Switch Extension Harness



9 Signal Unit Coverter



10 Dual Station Main Harness



11 BCM #2 Wiring Harness



12 Engine Wire Harness



13A Main Switch Panels



13B 2nd Station / Push Button



14 Emergency Switch Panel



15 Main Wiring Harness



17 Troll Mode Switch



SINGLE ENGINE S.P.C. 2.0 CONTROL KITS

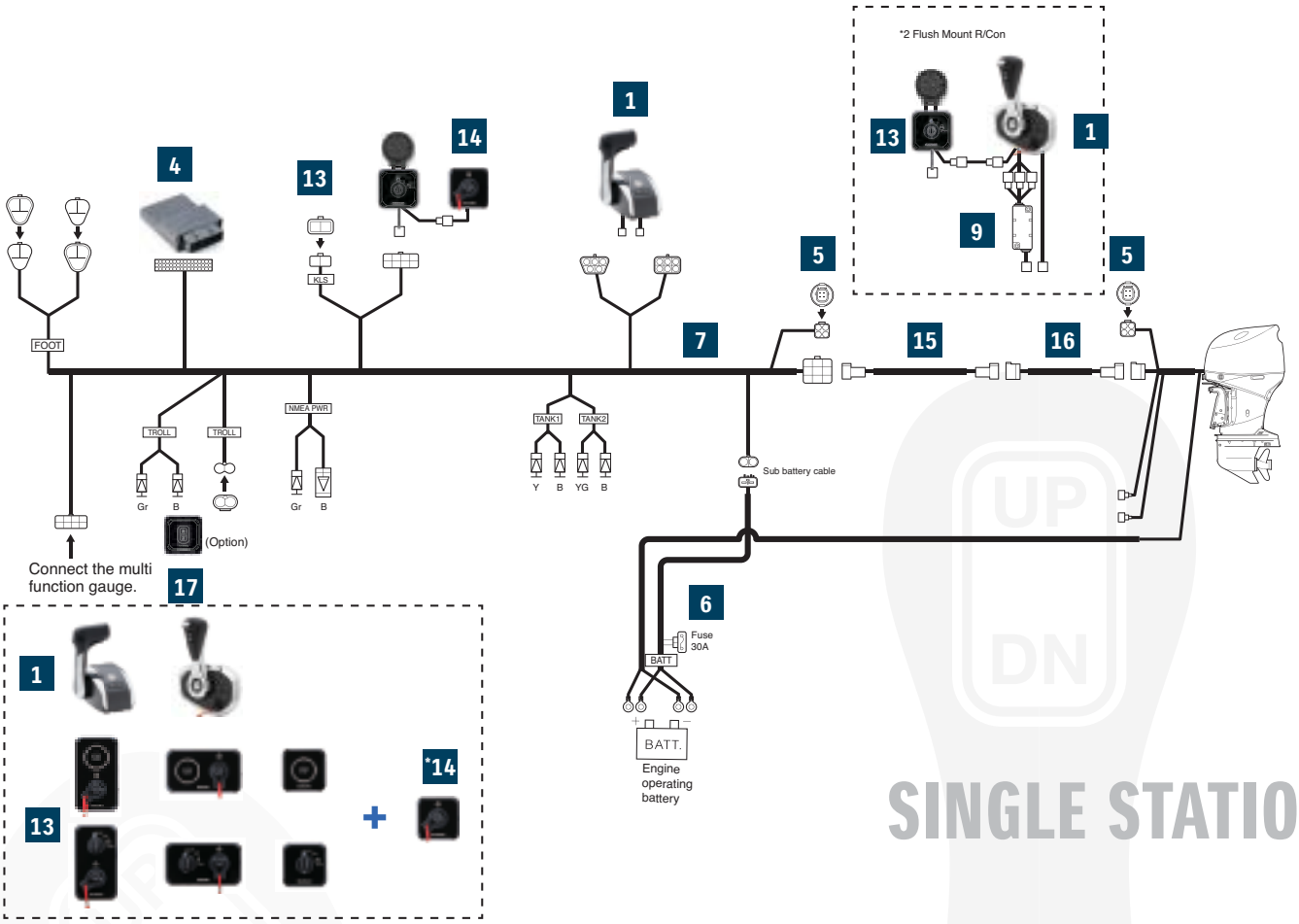

SINGLE STATION

SINGLE ENGINE SPC 2.0 CONTROL KITS

			67000-98L00 1st Binnacle Kit	67000-98LA0 2nd Binnacle Kit	67000-98L10 Flush Mount Kit	67000-98LB0 2nd Flush Kit
1	67200-98L00	Binnacle Mount R/C Box	1	1	-	-
	67200-98L20	Flush Mount R/C Box	-	-	1	1
3	38500-93J90	Warning Buzzer	-	1	-	1
	09407-08401	Warning Buzzer Clamp	-	1	-	1
4	36770-98L00	Boat Control Module	1	1	1	1
	36775-98L00	BCM Holder (L)	1	1	1	1
	36776-98L00	BCM Holder (R)	1	1	1	1
	33925-98L00	BCM Cushion	1	1	1	1
5	33926-98L00	Terminal Resistor	2	-	2	-
6	36625-98J10	Battery - Lead	1	-	1	-
7	36623-98L00	BCM #1 Wiring Harness	1	-	1	-
8	36627-98L10	Harness Assy, Emgency Switch Ext.	-	-	1	1
9	37140-98L00	Signal Converter	-	-	1	1
10	36622-98L00	Dual - Station Wiring Harness	-	1	-	1
11	36624-98L00	BCM #2 Wiring Harness	-	1	-	1
-	09403-13402	Harness Clamp	10	10	10	10
13A*	37100-98L00	Modular Ignition Switch	Choose 1*		Choose 1*	
	37100-98L10	Vertical Ignition Switch				
	37100-98L20	Horizontal Ignition Switch				
13B*	37290-98L00	Modular Push Button Ignition		Choose 1*		37290-98L00 (Purchase separately)
	37290-98L10	Vertical Push Button Ignition				
	37290-98L20	Horizontal Push Button Ignition				
14***	37803-98L00	Modular Emergency Switch	1***			
15	36620-98L00	21' Main Wiring Harness	Select required length, 1 required		Select required length, 1 required	
	36620-98L10	31' Main Wiring Harness				
16	36620-98L20	6.5' Main Harness Extension	Select if necessary			
17	37860-98L00	Troll Mode Switch	Optional			
18	36627-98L00	R/C Extension Harness			1****	1****

*Switch panels are sold separately, select type
**Push button ignition switches for 2nd station only
*** Required when using 37100-98L00 or 37290-98L00 with binnacle kit. Flush mount kit has integrated emergency stop on control
****Required when using Flush Mount Control kit

DUAL ENGINE S.P.C. 2.0 CONTROL KITS

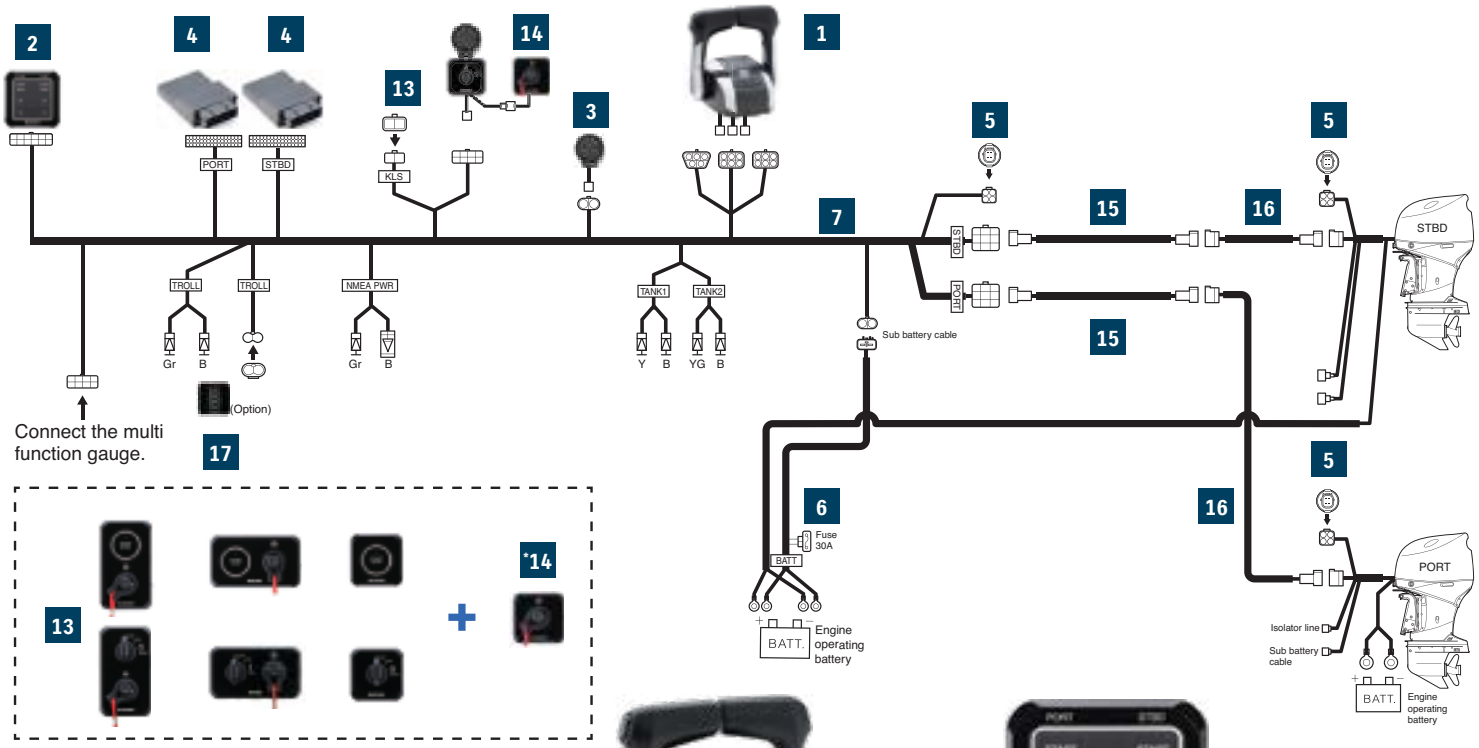

SINGLE STATION



1 **Binnacle Mount R/C Box**



2 **Dual Engine Control Panel**

DUAL ENGINE S.P.C. 2.0 CONTROL KITS

			67000-98L20 1st Station Kit	67000-98LC0 2nd Station Kit
1	67200-98L10	Binnacle Remote Control Box	1	1
2	37120-98L00	Control Panel	1	1
3	38500-93J90	Warning Buzzer	1	2
	39407-08401	Warning Buzzer Clamp	1	2
4	36770-98L00	Boat Control Module (BCM)	1	2
	36775-98L00	BCM Holder (L)	1	2
	36776-98L00	BCM Holder (R)	1	2
	33925-98L00	BCM Cushion	1	2
5	33926-89L00	Terminal Resistor	2	-
6	36625-98J10	Battery - Lead	1	-
7	36623-98L30	BCM # 1 Wiring Harness	1	-
10	36622-89L00	Dual - Station Wiring Harness	-	1
11	36624-98L10	BCM #2 Wiring Harness	-	1
-	09403-13402	Harness Clamp	15	10
-	36612-98J20	Counter Rotation Adapter	1	-
13A*	37100-98L00	Modular Ignition Switch	Choose 1*	
	37100-98L10	Vertical Ignition Switch		
	37100-98L20	Horizontal Ignition Switch		
13B*	37290-98L00	Modular Push Button Ignition		Choose 1**
	37290-98L10	Vertical Push Button Ignition		
	37290-98L20	Horizontal Push Button Ignition		
14***	37803-98L00	Modular Emergency Switch	1***	1***
15	36620-98L00	21' Main Wiring Harness	Select required length, 2 required	Select required length, 2 required
	36620-98L10	31' Main Wiring Harness		
16	36620-98L20	6.5' Main Harness Extension	Select if necessary	
17	37860-98L00	Troll Mode Switch	Optional	
18	36627-98L00	R/C Extension Harness	Select if necessary	

*Switch panels are sold separately, select type
**Push button ignition switches for 2nd station only
*** Required when using 37100-98L00 or 37290-98L00

TRIPLE ENGINE S.P.C. 2.0 CONTROL KITS

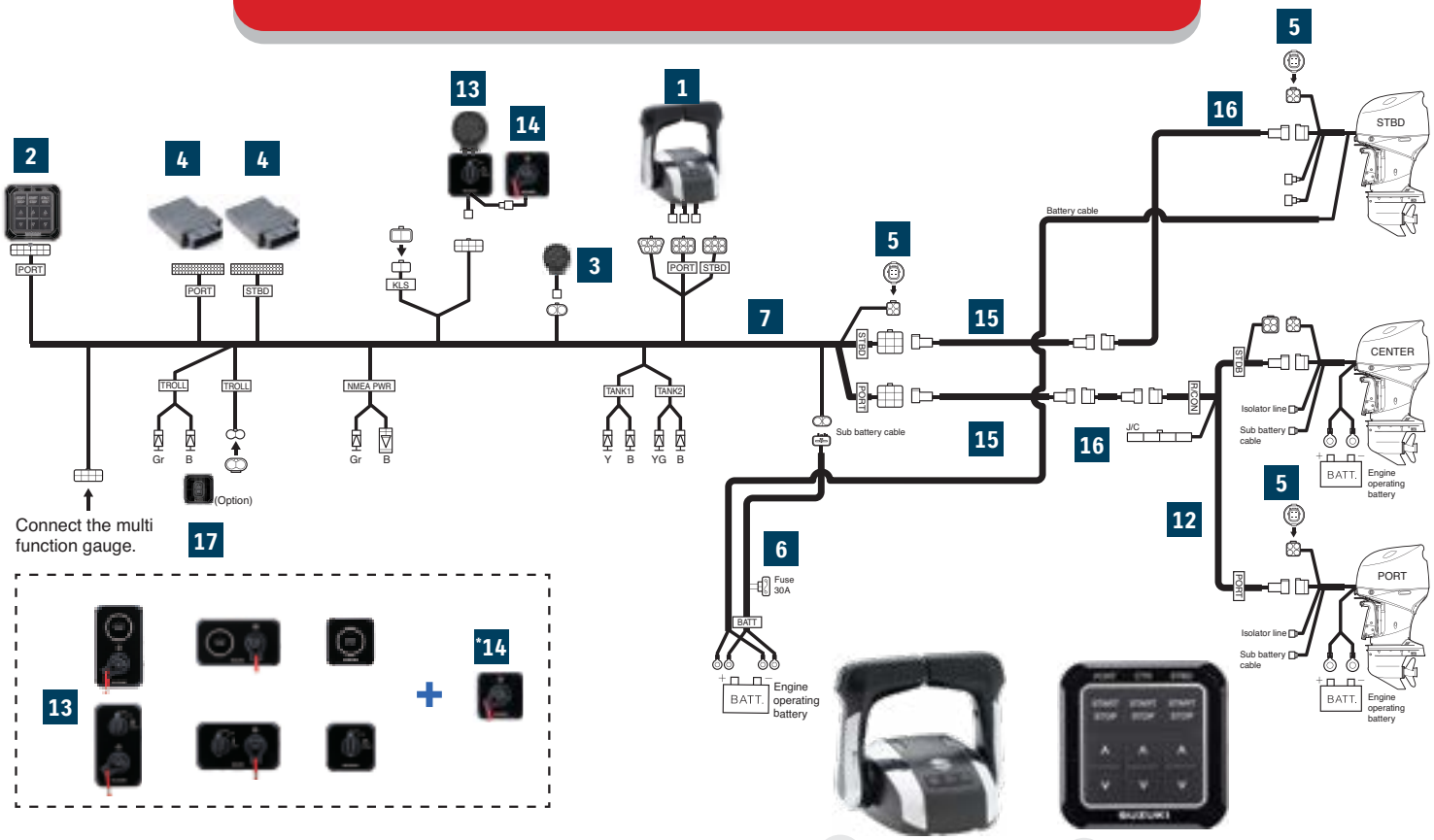

SINGLE STATION

1 **Binnacle Mount R/C Box**

2 **Triple Engine Control Panel**

TRIPLE ENGINE S.P.C. 2.0 CONTROL KITS

			67000-98L30 1st Station Kit	67000-98LD0 2nd Station Kit
1	67200-98L10	Binnacle Remote Control Box	1	1
2	37120-98L10	Control Panel	1	1
3	38500-93J90	Warning Buzzer	1	2
	09407-08401	Warning Buzzer Clamp	1	2
4	36770-98L00	Boat Control Module (BCM)	2	2
	36775-98L00	BCM Holder (L)	2	2
	36776-98L00	BCM Holder (R)	2	2
	33925-98L00	BCM Cushion	2	2
5	33926-98L00	Terminal Resistor	3	-
6	36625-98J10	Battery - Lead	1	-
7	36623-98L30	BCM # 1 Wiring Harness	1	-
10	36622-98L00	Dual - Station Wiring Harness	-	1
11	36624-98L10	BCM #2 Wiring Harness	-	1
12	36621-98L00	Engine Wiring Harness	1	-
-	09403-13402	Harness Clamp	18	10
-	36612-98J20	Counter Rotation Adapter	1	-
13A*	37100-98L00	Modular Ignition Switch	Choose 1*	
	37100-98L10	Vertical Ignition Switch		
	37100-98L20	Horizontal Ignition Switch		
13B*	37290-98L00	Modular Push Button Ignition		Choose 1**
	37290-98L10	Vertical Push Button Ignition		
	37290-98L20	Horizontal Push Button Ignition		
14***	37803-98L00	Modular Emergency Switch	1***	1***
15	36620-98L00	21' Main Wiring Harness	Select required length, 2 required	Select required length, 2 required
	36620-98L10	31' Main Wiring Harness		
16	36620-98L20	6.5' Main Harness Extension	Select if necessary	
17	37860-98L00	Troll Mode Switch	Optional	
18	36627-98L00	R/C Extension Harness	Select if necessary	
19	36627-98L20	CAN Extension Harness	Select if necessary	

*Switch panels are sold separately, select type
**Push button ignition switches for 2nd station only
*** Required when using 37100-98L00 or 37290-98L00

QUAD ENGINE S.P.C. 2.0 CONTROL KITS

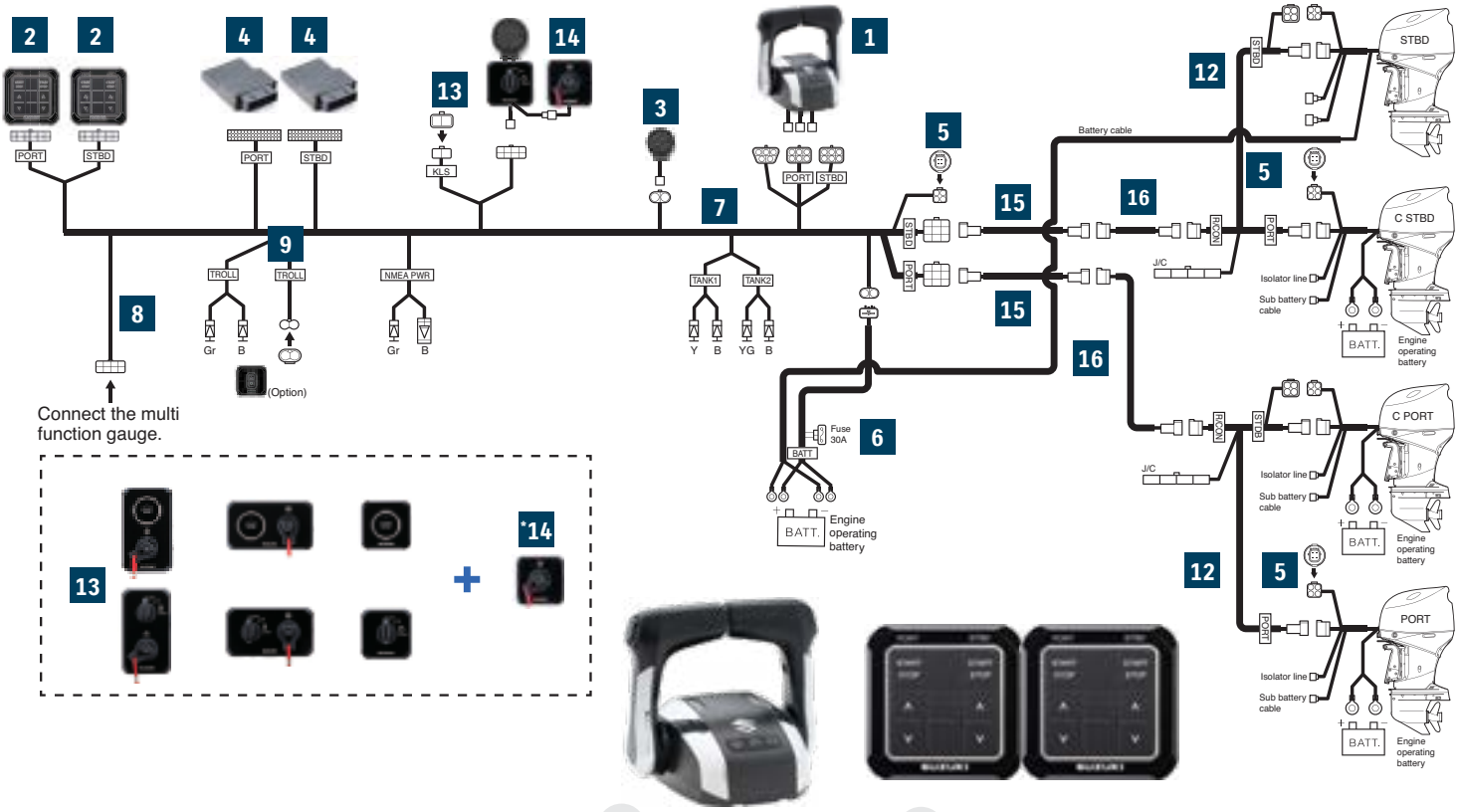

1 Binnacle Mount R/C Box

2 Quadruple Engine Control Panel

SINGLE STATION

QUADRUPLE ENGINE S.P.C. 2.0 CONTROL KITS

			67000-98L40 1st Station Kit	67000-98LE0 2nd Station Kit
1	67200-98L10	Binnacle Remote Control Box	1	1
2	37120-98L20	Control Panel Port	1	1
	37120-98L30	Control Panel STBD	1	1
3	38500-93J90	Warning Buzzer	1	1
4	09407-08401	Warning Buzzer Clamp	1	1
	36770-98L00	Boat Control Module	2	2
	36775-98L00	BCM Holder (L)	2	2
	36776-98L00	BCM Holder (R)	2	2
	33925-98L00	BCM Cushion	2	2
5	33926-98L00	Terminal Resistor	3	-
6	36625-98J10	Battery - Lead	1	-
7	36623-98L40	BCM # 1 Wiring Harness	1	-
10	36622-98L00	Dual - Station Wiring Harness	-	1
11	36624-98L20	BCM #2 Wiring Harness	-	1
12	36621-98L00	Engine Wiring Harness	2	-
-	09403-13402	Harness Clamp	20	15
-	36612-98J20	Counter Rotation Adapter	2	-
13A*	37100-98L00	Modular Ignition Switch	Choose 1*	
	37100-98L10	Vertical Ignition Switch		
	37100-98L20	Horizontal Ignition Switch		
13B*	37290-98L00	Modular Push Button Ignition		Choose 1**
	37290-98L10	Vertical Push Button Ignition		
	37290-98L20	Horizontal Push Button Ignition		
14***	37803-98L00	Modular Emergency Switch	1***	1***
15	36620-98L00	21' Main Wiring Harness	Select required length, 2 required	Select required length, 2 required
	36620-98L10	31' Main Wiring Harness		
16	36620-98L20	6.5' Main Harness Extension	Select if necessary	
17	37860-98L00	Troll Mode Switch	Optional	
18	36627-98L00	R/C Extension Harness	Select if necessary	
19	36627-98L20	CAN Extension Harness	Select if necessary	

*Switch panels are sold separately, select type
**Push button ignition switches for 2nd station only
*** Required when using 37100-98L00 or 37290-98L00

SUZUKI PRECISION CONTROL 2.0

New for 2022, keyed and push button ignition switch panels now feature a gloss black face with concealed screws for a cleaner more luxurious finish.

For DF115BG/140BG/150AP/175AP/200AP/ 250AP/300AP/300B/350A.





1ST STATION KEYED IGNITION SWITCHES

37100-98L00	Modular Keyed Ignition
37100-98L10	Vertical Keyed Ignition w/ Emergency Stop
37100-98L20	Horizontal Keyed Ignition w/ Emergency Stop

2ND STATION PUSH BUTTON IGNITION SWITCHES (Pictured on Page 5)

37290-98L00	Modular Push Button Ignition
37290-98L10	Vertical Push Button Ignition w/ Emergency Stop
37290-98L20	Horizontal Push Button Ignition w/ Emergency Stop

COMMON TO KEYED OR PUSH BUTTON MODULAR

37803-98L00	Modular Emergency Stop





Control Panel Assemblies

37120-98L00	Dual Engine Control Panel (Pictured)
37120-98L10	Triple Engine Control Panel
37120-98L20	Quad Control Panel - Port
37120-98L30	Quad Control Panel - Starboard



Replacement Wiring Harness

36621-98L00	Triple and Quadruple Engine Wiring Harness



Battery Sub-Lead

For use with SPC / Digital Models.

36625-98J10	2.2m / 7’
36625-98J20	6.1m / 20’



Battery Isolator Lead Sets

Used for charging auxiliary battery.

33830-98J02	DF300 2007-2011 only
33830-98J11	DF150A/175A/200A/150AP/175AP /200AP/300AP/350A

Wiring Harnesses

Main Wiring Harness. Order length as needed for rigging applications.



36620-98L00	21’ (6.5m) Wiring Harness
36620-98L10	31’ (9.5m) Wiring Harness
36620-98L20	6.5’ (2m) Wiring Harness Extension (Optional; order as needed)



BCM Harness

36623-98L00	BCM Harness No. 1 for Single Engine Single Station
36623-98L30	BCM Harness No. 1 for Multiple Engine Single Station
36624-98L00	BCM Harness No. 2 for Single Engine Single Station
36624-98L10	BCM Harness No. 2 for Multiple Engine Single Station
36623-98L40	BCM Harness No. 1 for Quadruple Engine
36624-98L20	BCM Harness No. 2 for Quadruple Engine

MECHANICAL CONTROLS



Suzuki Genuine Control Boxes are designed for longevity and ease of use. Choose a control box that fits your application. We offer a Single Binnacle Control Box for your top of the line Suzuki Outboard, or choose a Dual Binnacle Control Box to manage 2 Suzuki Outboards masterfully. Suzuki Genuine Control Boxes define accuracy, user-friendliness and durability.



Single Binnacle Control Box Kit

Single Binnacle Control Box uses a convenient thumb-operated power trim and tilt switch, push-button shifting disengagement for faster warm-ups and built-in neutral safety switch. Kit includes items listed. *Main Wiring Harness and Control Cable must be ordered separately, see next page.

67000-88L03*	Single Binnacle Control Box Kit

Includes:

37100-96J27	Ignition Switch Panel with Emergency Stop and Warning Buzzer Assembly
67200-88L01	Single Binnacle Control Box Assembly





Dual Binnacle Control Box Kit

Dual Binnacle Control Box includes the same features as the Single Binnacle Control Box, plus a unique base mounted PTT system allowing you to trim the motors individually then adjust them together for maximum performance. Kit includes items listed.
*Main Wiring Harness and Control Cable must be ordered separately, see next page.

67000-88L13	Dual Binnacle Control Box Kit

Includes:

37100-96J17	Dual Ignition Switch with Emergency Stop
38500-92X52	Warning Buzzers (2)
67200-88L11	Dual Binnacle Control Box Assembly



Replacement Control Boxes

67200-88L01	Single Binnacle Control Box '05 – Current
67200-88L11	Dual Binnacle Control Box '05 – Current
67200-93J34	Flush Mount Control Box '05 – Current

Flush Mount Binnacle Control Box Kit



Suzuki's top quality Flush Mount Control Box features include a smooth action, thumb control power trim and tilt switch, a push button to disengage the shifting for faster warm-ups and a built-in neutral safety switch. Reversible for left hand installations. Kit includes items listed. *Main Wiring Harness and Control Cable must be ordered separately, see below.

67000-93JN0	Flush Mount Binnacle Control Box Kit

Includes:

37100-96J27	Ignition Switch Panel with Emergency Stop and Warning Buzzer Assembly
67200-93J34	Flush Mount Control Box

Miscellaneous Components

38500-92X50	Warning Buzzer.
36620-93J20	Control Box Adaptor Harness. Adapts 2005+ model control box with square connector to 2004 and earlier motors with round connector.
36620-93J30	Control Box Adaptor Harness. Adapts 2005+ model engine with square connector to 2004 and earlier harness with round connector.



67500-88L00	Single Binnacle Control Box Spacer



67500-88L10	Dual Binnacle Control Box Spacer

Wiring Harnesses



Analog Wiring Harnesses.

36620-89L00	21' Wiring Harness (NON PT or PTT)
36620-93J52	16' Wiring Harness (PT or PTT)
36620-93J02	21' Wiring Harness (PT or PTT)
36620-93J62	26' Wiring Harness (PT or PTT)

Side Mount Control Box Kits



Side Mount Control Boxes can be tailored to your needs. Standard features include a fast idle lever for easy warm-ups, a key-type ignition switch, and an emergency stop switch. *Main Wiring Harness must be ordered separately, see above. Choose correct control cable length, see below.

67200-94J31	DF8A thru DF30A	Single Engine With Buzzer
67200-93J61	DF9.9B thru DF250	Single Engine With PTT Switch

Suzuki Remote Control Cable Lengths

Suzuki Performance Cables have a unique design that incorporates a patent-pending splined core. Ridges on the core allow a close fit to the cable's inner liner with minimum contact, allowing the core to glide back and forth smoothly. All cables are factory tested and approved for heavy use applications. Order cable length as needed.

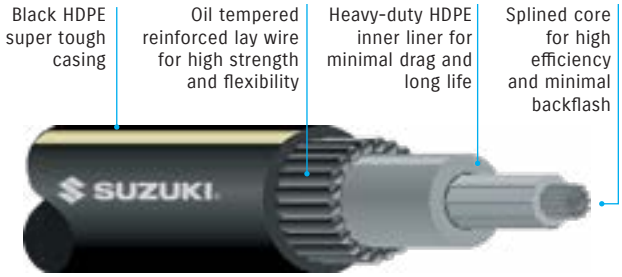

990C0-11002-008	8'	**990C0-11002-014**	14'	**990C0-11002-020**	20'	**990C0-11002-026**	26'
990C0-11002-009	9'	**990C0-11002-015**	15'	**990C0-11002-021**	21'	**990C0-11002-027**	27'
990C0-11002-010	10'	**990C0-11002-016**	16'	**990C0-11002-022**	22'	**990C0-11002-028**	28'
990C0-11002-011	11'	**990C0-11002-017**	17'	**990C0-11002-023**	23'	**990C0-11002-029**	29'
990C0-11002-012	12'	**990C0-11002-018**	18'	**990C0-11002-024**	24'	**990C0-11002-030**	30'
990C0-11002-013	13'	**990C0-11002-019**	19'	**990C0-11002-025**	25'		

SUZUKI MULTI-FUNCTION GAUGE



Multi-Function Gauge – SMG4

When you're on the water, it's vital that you can get the information you need about your engine's condition and performance whenever you need it. That's exactly the thinking behind our Suzuki Multi-Function Gauge.

All the Information in One Place

This brilliantly simple technology gives you the right information at the right time, all on one user friendly, highly intuitive screen. You can view a wide range of important information including engine RPM, speed, trim angle, engine temp, and fuel economy. You'll also receive alerts from the engine's sensors and warning systems. All you need for effortless and relaxing boating in one simple, reassuring, and reliable device.

ANALOG TACHOMETER & SPEED MODE



* Speed sensor or GPS module will be required in order to display the speed.

DIGITAL TACHOMETER MODE



- Fuel flow (instantaneous)
- Mileage (instantaneous and average)
- Trip time, Trip distance

DIGITAL TACHOMETER & SPEED



ANALOG TACHOMETER & SPEED



ANALOG SPEED (NIGHT)



FUEL MODE



TROLL MODE





2022 NEW FEATURES

MULTILINGUAL MENU



SMG4 is now available in 13 languages.

AUTOMATIC TRIM



Automatically adjusts trim based on engine RPM

DEMO MODE



Pre-installed data demonstrates gauge functionality. Great for boat shows!

DIAGNOSTIC MOBILE APP



New Advanced Service Tool

Our new Suzuki Diagnostic App lets you send your Suzuki Authorized Dealer information they can use to service and maintain your outboard instantly and easily.

SDS Mobile works in tandem with our new Multi-Function Gauge and new Multi-Function Display. Simply download the App, available on iOS and Android™, to your smartphone: you don't need a separate device. When you email your QR code to the dealer, the data will be transferred directly - including engine serial number, number of hours since last oil change, and total hours of operation at different RPM.

IOS is a registered trademark or trademark of Cisco Systems, Inc. and/or its affiliates in the United States and certain other countries. Android is a trademark of Google LLC.

DOWNLOAD THE APP FROM

Download on the App Store

GET IT ON Google Play

Apple and Apple logo are trademarks of Apple Inc., registered in the U.S and other countries. App Store is a service mark of Apple Inc., registered in the U.S. and other countries.

Google Play and the Google Play logo are trademarks of Google LLC.

SDS Mobile App and Email Service is entirely free of charge

How It Works

1. The outboard sends engine data and converts it into a QR code displayed on the Multi-Function Gauge or Multi-Function Display.
2. With the SDS Mobile App, you can then scan the QR code on the Multi-Function Gauage or Multi-Function Display with your phone. The engine data will be stored on your smart phone.
3. You can then send the engine data via email to your Suzuki Dealer.



SUZUKI MULTIFUNCTION GAUGE ACCESSORIES & KIT CONTENTS LIST

NMEA 2000 Cable Kit

This cable kit includes parts needed to make a basic NMEA 2000 backbone. A backbone is required for speed data to be displayed on SMG using either a GPS antenna or paddle wheel transducer. Kit contents in table below.

990C0-88L00-KIT

NMEA 2000 Backbone Cable Kit			
	Part Number	Part Name	990C0-88L00-KIT
4	990C0-88104	2' N2K Cable	1
5	990C0-88112	N2K Power Cable / T	1
6	990C0-88110	Backbone T	1
7	990C0-88113	Terminator (F)	1
8	990C0-88114	Terminator (M)	1

SMG Sun Cover

Replacement white plastic cover for SMG.

34211-96L00



Dual Mechanical Engine SMG Requirements

See below chart for required SMG components for dual mechanical engines. Please order components separately.

Components Chart - Dual Mechanical Engine			Single Engine	Dual Engine
1	34011-96L41	SMG Gauge	1	2
2	36665-87L10	Mech Multi Engine Adpt.	-	1
4	990C0-88104	2' Backbone Cable	-	2
5	990C0-88112	Power Cable	-	1
6	990C0-88110	Backbone T	-	2
7	990C0-88113	Female Terminator	-	1
8	990C0-88114	Male Terminator	-	1
11	36661-96L30	Mech Gauge Adapter	1	2

COMPONENTS LIST

1 Multifunction Gauge



2 Mechanical Multi Engine Adapter



3 Extension Wire



4 2' N2K Cable



5 N2K Power Cable / T



6 Backbone T



7 Terminator (F)



8 Terminator (M)



9 N2K Cable



11 Gauge Adapter



13a Paddle Wheel/Speed Sensor



13b GPS Antenna w/ Compass



1	34011-96L16	Multifunction Gauge
2	36665-87L10	Mechanical Multi Engine Adapter
3	36682-92E00	Extension wire
4	990C0-88104	2' N2K Cable
	990C0-88105	6' N2K Cable
	990C0-88107	15' N2K Cable
	990C0-88108	25' N2K Cable
5	990C0-88112	N2K Power Cable / T
6	990C0-88110	Backbone T
7	990C0-88113	Terminator (F)
8	990C0-88114	Terminator (M)
9	990C0-88104	2' N2K Cable
	990C0-88105	6' N2K Cable
	990C0-88107	15' N2K Cable
	990C0-88108	25' N2K Cable
10	36666-96L00	Gauge Power Adapter (dual station)
11	36661-96L20	Gauge Adapter (SPC 1.0 Only)
	36661-96L30	Gauge Adapter (Mechanical Engines)
12a	36667-96L00	Gauge Adapter (SPC 2,3,4)
12b	36667-96L30	Gauge Adapter for tanks 3-4
13a	990C0-88317	Paddle Wheel / Speed Sensor
13b	990C0-88122	GPS Antenna w/ Compass
14	36667-96L11	2nd Gauge Adapter
15	36665-96L00	Dual Station Adapter
16	36667-96L20	Extension wire
17	36660-89L02	Adapter for use with DF9.9B - DF30A

SUZUKI SINGLE MECHANICAL ENGINE



Mechanical
Single

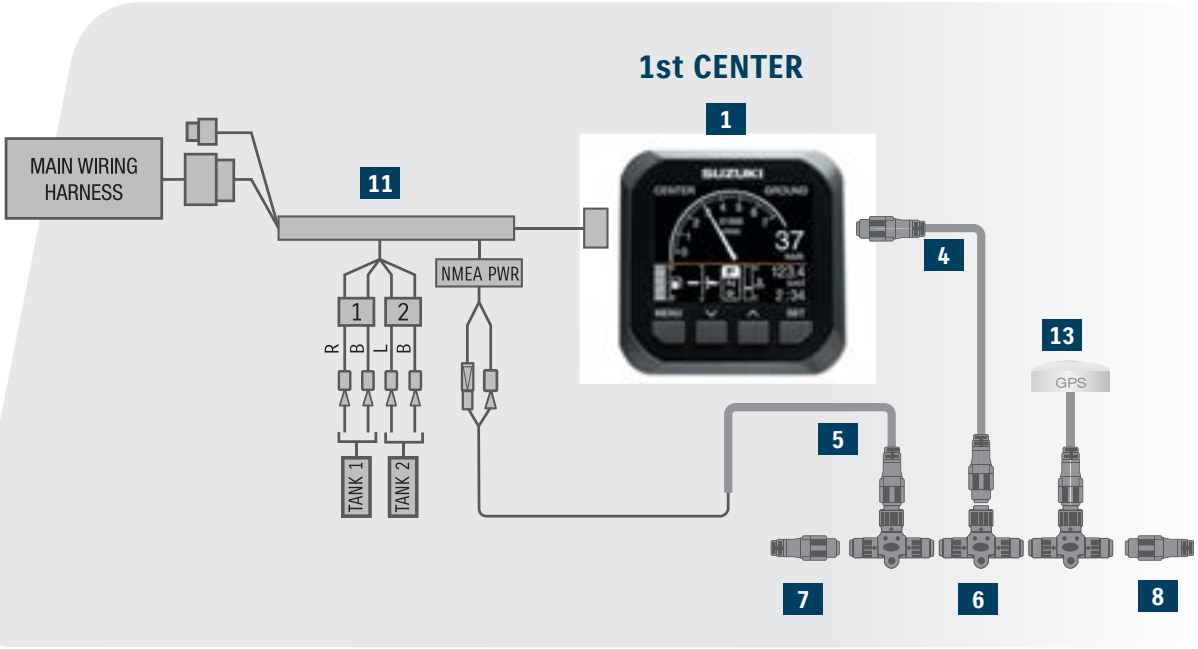

Single Mechanical Engine Kit

This Single Mechanical Engine Kit gives you what you need for single station installs. Includes Suzuki Multifunction gauge, engine adapter, and sun cover. See page 17 for required components.

34000-96L48

NMEA 2000 Cable Kit

This NMEA 2000 Cable Kit includes the basics for what you need to make a NMEA 2000 backbone in your electronics system. A backbone is required for speed data (optional) to be shown on the Suzuki Multifunction Displays. Speed sources listed below. See page 17 for required components.

990C0-88L00-KIT

Speed Data Sources (Optional)

SMG must have a speed source to display speed data. This can be achieved by adding a GPS antenna or paddle wheel transducer to the backbone if no other speed source is available. Simply use the included N2K Tee to extend your backbone and plug it in! (GPS option shown in diagram)

990C0-88122	GPS Antenna	990C0-88317	Paddle Wheel



SUZUKI DUAL MECHANICAL ENGINES



Mechanical
Dual

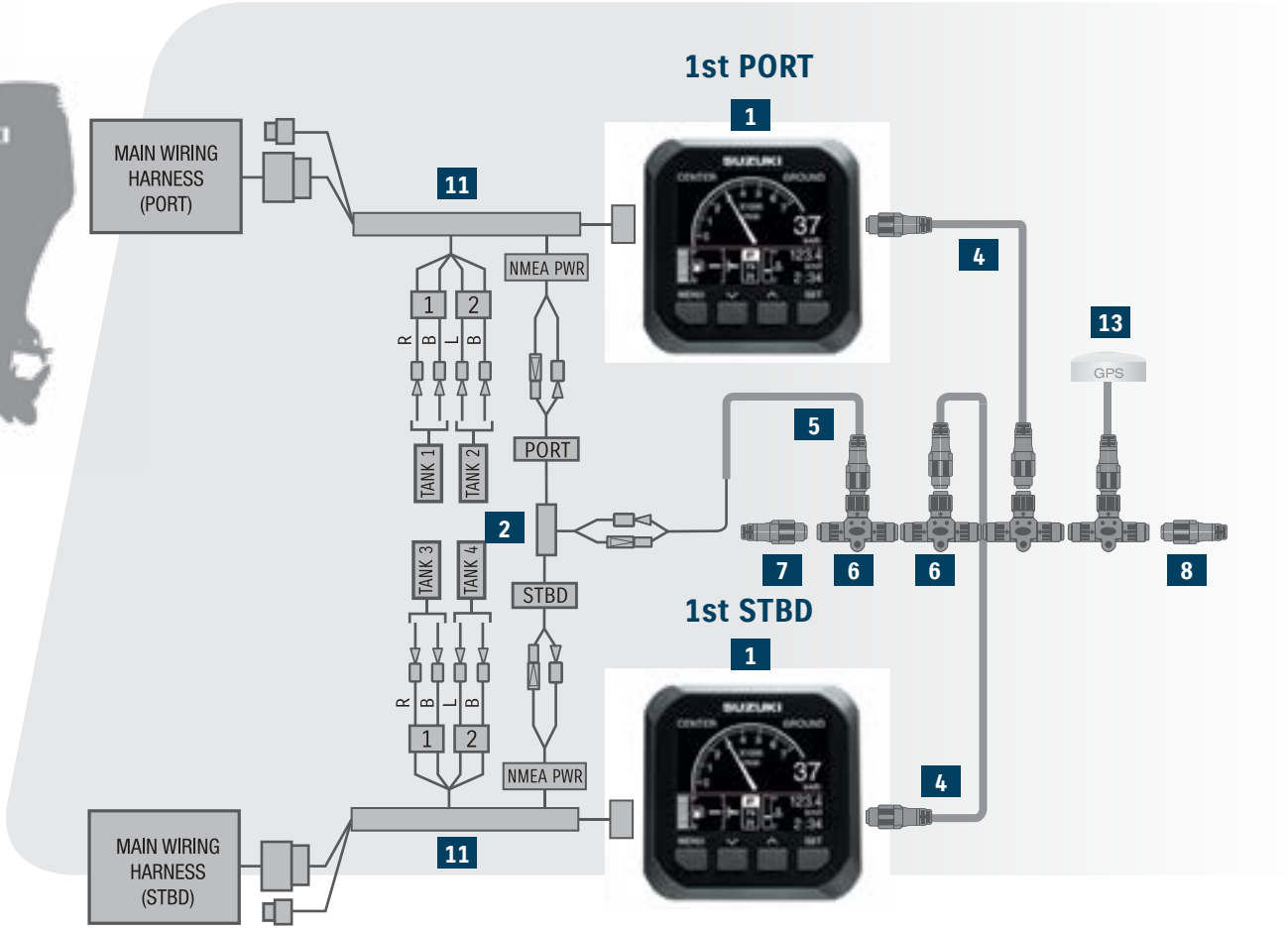

Dual Mechanical Engine Kit

This Dual Mechanical Engine Kit gives you what you need for single station installs. Includes Suzuki Multifunction Gauge, engine adapter, basic N2K components, and sun cover. See page 17 for required components.

990C0-96L56-KIT

NMEA 2000 Cable Kit*

This NMEA 2000 Cable Kit includes the basics for what you need to make a NMEA 2000 backbone in your electronics system. A backbone is required for speed data (optional) to be shown on the Suzuki Multifunction Displays. Speed sources listed below. See page 17 for required components.

990C0-88L00-KIT

Speed Data Sources (Optional)

SMG must have a speed source to display speed data. This can be achieved by adding a GPS antenna or paddle wheel transducer to the backbone if no other speed source is available. Simply use the included N2K Tee to extend your backbone and plug it in! (GPS option shown in diagram)

990C0-88122	GPS Antenna	990C0-88317	Paddle Wheel

SUZUKI PRECISION CONTROL 2.0 SINGLE

SINGLE ENGINE - SINGLE STATION

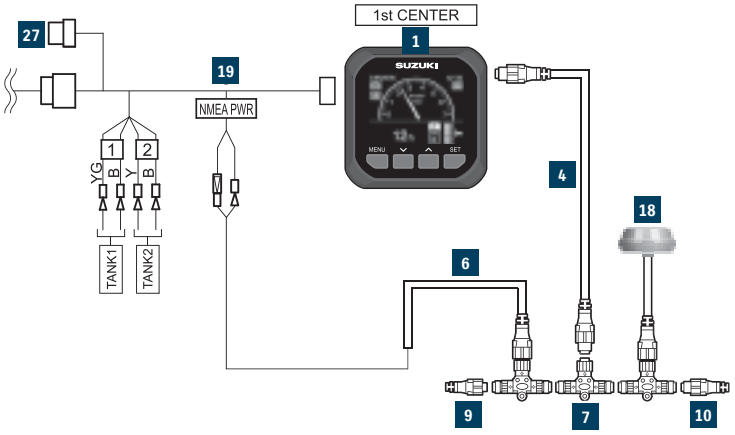

SINGLE ENGINE - DUAL STATION

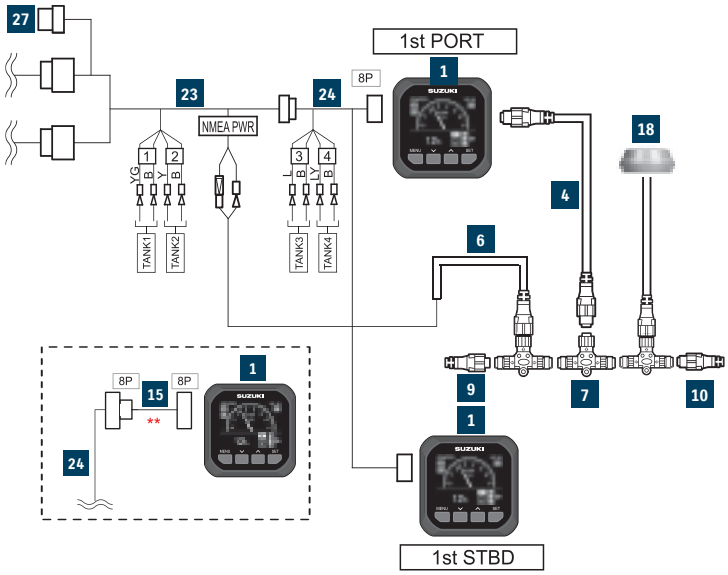

Connecting an SMG to SPC 2.0 is now easier than ever! SMG now plugs directly in to the BCM harness, eliminating the need for an extra adapter harness. As an option, if you also require speed data to be displayed, also purchase a NMEA2000 (N2K) starter kit and a speed source.

No.	Part Number	Part Name	Qty.	
1	Suzuki Multifunction Gauge	34011-96L41	1	SMG directly plugs in to BCM Harness
4	2' N2K Cable	990C0-88L00-KIT*	1	Part number 990C0-88104, included in N2K Kit
6	N2K Power Cable			Part number 990C0-88112, included in N2K Kit
7	N2K Tee			Part Number 990C0-88110, included in N2K Kit
9	Terminator (F)			Part number 990C0-88113, included in N2K Kit
10	Terminator (M)			Part number 990C0-88114, included in N2K Kit
18	Paddle Wheel Sensor	990C0-88317	1	Choose Either (Optional, only if speed data is required)
	GPS Module (Pictured)	990C0-88122		
19	BCM Harness #1	36623-98L00	-	Included in SPC 2.0 Control Kits
27	Terminal Resistor	33926-98L00	-	Included in SPC 2.0 Control Kits

*Only required if adding a speed source

No.	Part Number	Part Name	Qty.	
1	Suzuki Multifunction Gauge	34011-96L41	2	SMG directly plugs in to BCM Harness
4	2' N2K Cable	990C0-88L00-KIT*	1	Part number 990C0-88104, included in N2K Kit
6	N2K Power Cable			Part number 990C0-88112, included in N2K Kit
7	N2K Tee			Part Number 990C0-88110, included in N2K Kit
9	Terminator (F)			Part number 990C0-88113, included in N2K Kit
10	Terminator (M)			Part number 990C0-88114, included in N2K Kit
5	15' N2K Cable	990C0-88107	1	Choose required length from station 1 to station 2
	25' N2K Cable	990C0-88108		
18	Paddle Wheel Sensor	990C0-88317	1	Choose Either (Optional, only if speed data is required)
	GPS Module (Pictured)	990C0-88122		
19	BCM Harness #1	36623-98L00	-	Included in SPC 2.0 Control Kits
27	Terminal Resistor	33926-98L00	-	Included in SPC 2.0 Control Kits

*Only required if adding a speed source

Speed Data Sources (Optional)

SMG must have a speed source to display speed data. This can be achieved by adding a GPS antenna or paddle wheel transducer to the backbone if no other speed source is available. Simply use the included N2K Tee to extend your backbone and plug it in! (GPS option shown in diagram)

990C0-88122	GPS Antenna	990C0-88317	Paddle Wheel

*See page 17 for kit parts lists with corresponding diagram reference numbers

SUZUKI PRECISION CONTROL 2.0 DUAL

DUAL ENGINES - SINGLE STATION

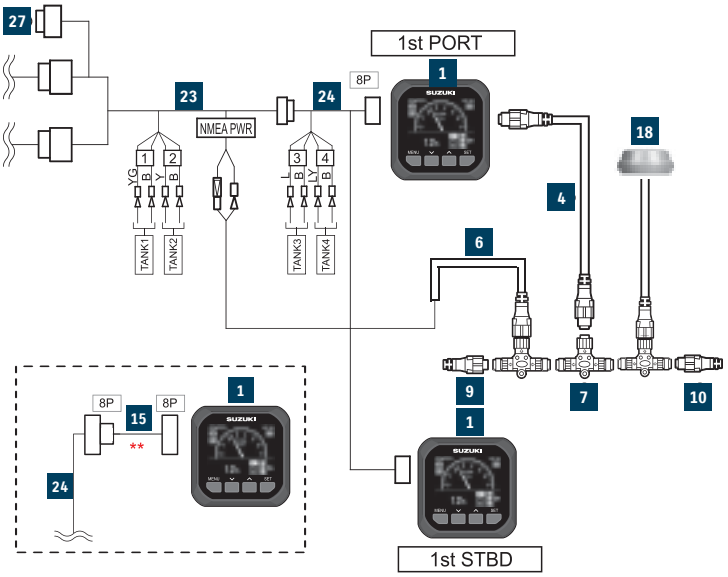

No.	Part Number	Part Name	Qty.	
1	Suzuki Multifunction Gauge	34011-96L41	2	SMG directly plugs in to BCM Harness
4	2' N2K Cable	990C0-88L00-KIT*	1	Part number 990C0-88104, included in N2K Kit
6	N2K Power Cable			Part number 990C0-88112, included in N2K Kit
7	N2K Tee			Part Number 990C0-88110, included in N2K Kit
9	Terminator (F)			Part number 990C0-88113, included in N2K Kit
10	Terminator (M)			Part number 990C0-88114, included in N2K Kit
15	2' Gauge Extension	36667-96L60	(1)	Optional, only use if necessary
18	Paddle Wheel Sensor	990C0-88317	1	Choose Either (Optional, only if speed data is required)
	GPS Module (Pictured)	990C0-88122		
23	BCM Harness #1, Multi-Engine	36623-98L30	-	Included in SPC 2.0 Control Kits
24	Multi-Gauge Adapter**	36667-96L50	1	Same as below, but has connections for tanks 3 and 4
		36667-96L40		Used to Connect Multiple SMG's
27	Terminal Resistor	33926-98L00	-	Included in SPC 2.0 Control Kits

*Only required if adding a speed source

DUAL ENGINES - DUAL STATION

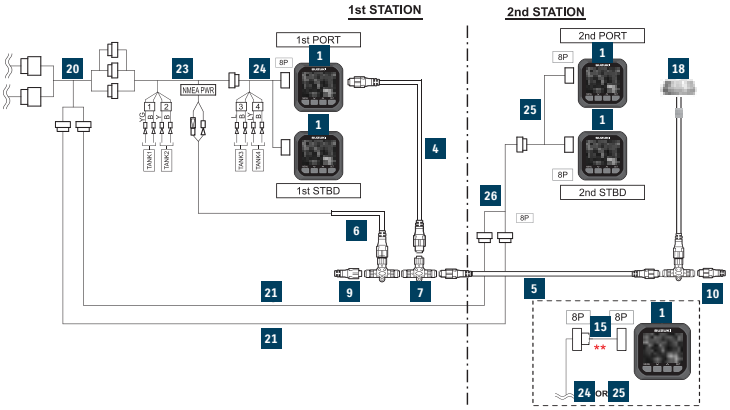

No.	Part Number	Part Name	Qty.	
1	Suzuki Multifunction Gauge	34011-96L41	4	SMG directly plugs in to BCM Harness
4	2' N2K Cable	990C0-88L00-KIT*	1	Part number 990C0-88104, included in N2K Kit
6	N2K Power Cable			Part number 990C0-88112, included in N2K Kit
7	N2K Tee			Part Number 990C0-88110, included in N2K Kit
9	Terminator (F)			Part number 990C0-88113, included in N2K Kit
10	Terminator (M)			Part number 990C0-88114, included in N2K Kit
5	15' N2K Cable	990C0-88107	1	Choose required length from station 1 to station 2
	25' N2K Cable	990C0-88108		
15	2' Gauge Extension	36667-96L60	1	Optional, only use if necessary
18	Paddle Wheel Sensor	990C0-88317	1	Choose Either (Optional, only if speed data is required)
	GPS Module (Pictured)	990C0-88122		
20	2nd Station Main Harness	36622-98L00	-	Included in SPC 2.0 Control Kits
21	21' Main Harness	36620-98L00	-	For illustration purposes only
	31' Main Harness	36620-98L10		
23	BCM Harness #1, Multi-Engine	36623-98L30	-	Included in SPC 2.0 Control Kits
24	Multi-Gauge Adapter**	36667-96L50	1	Same as below, but has connections for tanks 3 and 4
25		36667-96L40	1	Used to Connect Multiple SMG's
26	BCM Harness #2, Multi-Engine	36624-98L10	-	Included in SPC 2.0 Control Kits

*Only required if adding a speed source
**Can use 1 x 36667-96L40 + 1 x 36667-96L50, or 2 x 36667-96L40 if tanks 3 and 4 not required

SUZUKI PRECISION CONTROL 2.0 TRIPLE

TRIPLE ENGINE - SINGLE STATION

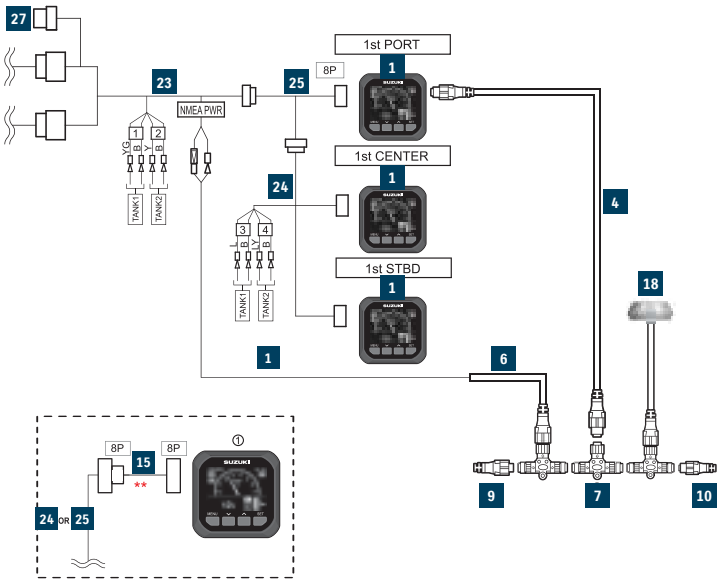

No.	Part Number	Part Name	Qty.	
1	Suzuki Multifunction Gauge	34011-96L41	3	SMG directly plugs in to BCM Harness
4	2' N2K Cable	990C0-88L00-KIT*	1	Part number 990C0-88104, included in N2K Kit
6	N2K Power Cable			Part number 990C0-88112, included in N2K Kit
7	N2K Tee			Part Number 990C0-88110, included in N2K Kit
9	Terminator (F)			Part number 990C0-88113, included in N2K Kit
10	Terminator (M)			Part number 990C0-88114, included in N2K Kit
15	2' Gauge Extension	36667-96L60	1	Optional, only use if necessary
18	Paddle Wheel Sensor	990C0-88317	1	Choose Either (Optional, only if speed data is required)
	GPS Module (Pictured)	990C0-88122		
23	BCM Harness #1, Multi-Engine	36623-98L30	-	Included in SPC 2.0 Control Kits
24	Multi-Gauge Adapter**	36667-96L50	1	Same as above, but has connections for tanks 3 and 4
25		36667-96L40	1	Used to Connect Multiple SMG's
27	Terminal Resistor	33926-98L00	-	Included in SPC 2.0 Control Kits

*Only required if adding a speed source
**Can use 1 x 36667-96L40 + 1 x 36667-96L50, or 2 x 36667-96L40 if tanks 3 and 4 not required

TRIPLE ENGINE - DUAL STATION

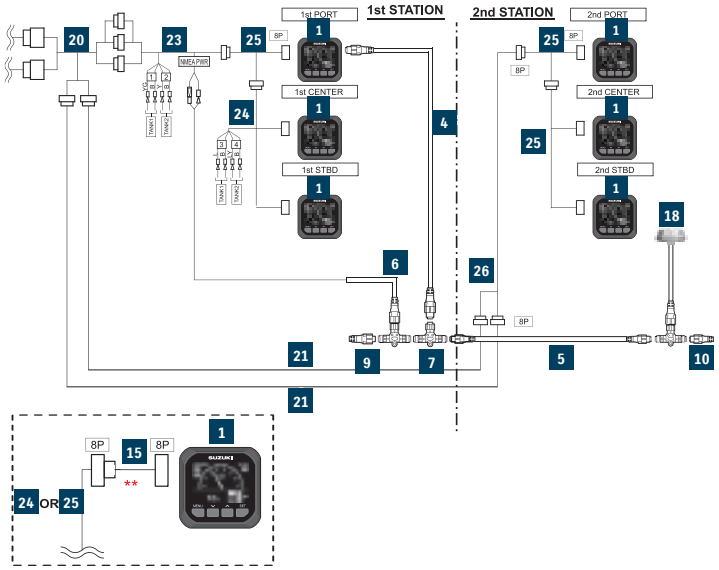

No.	Part Number	Part Name	Qty.	
1	Suzuki Multifunction Gauge	34011-96L41	6	SMG directly plugs in to BCM Harness
4	2' N2K Cable	990C0-88L00-KIT*	1	Part number 990C0-88104, included in N2K Kit
6	N2K Power Cable			Part number 990C0-88112, included in N2K Kit
7	N2K Tee			Part Number 990C0-88110, included in N2K Kit
9	Terminator (F)			Part number 990C0-88113, included in N2K Kit
10	Terminator (M)			Part number 990C0-88114, included in N2K Kit
5	15' N2K Cable	990C0-88107	1	Choose required length from station 1 to station 2
	25' N2K Cable	990C0-88108		
15	2' Gauge Extension	36667-96L60	1	Optional, only use if necessary
18	Paddle Wheel Sensor	990C0-88317	1	Choose Either (Optional, only if speed data is required)
	GPS Module (Pictured)	990C0-88122		
20	2nd Station Main Harness	36622-98L00	-	Included in SPC 2.0 Control Kits
21	21' Main Harness	36620-98L00	-	For illustration purposes only
	31' Main Harness	36620-98L10		
23	BCM Harness #1, Multi-Engine	36623-98L30	-	Included in SPC 2.0 Control Kits
24	Multi-Gauge Adapter**	36667-96L50	1	Same as above, but has connections for tanks 3 and 4
25		36667-96L40	3	Used to Connect Multiple SMG's
26	BCM Harness #2, Multi-Engine	36624-98L10	-	Included in SPC 2.0 Control Kits

*Only required if adding a speed source
**Can use 3 x 36667-96L40 + 1 x 36667-96L50, or 4 x 36667-96L40 if tanks 3 and 4 not required

SUZUKI PRECISION CONTROL 2.0 QUADRUPLE

QUADRUPLE ENGINE - SINGLE STATION

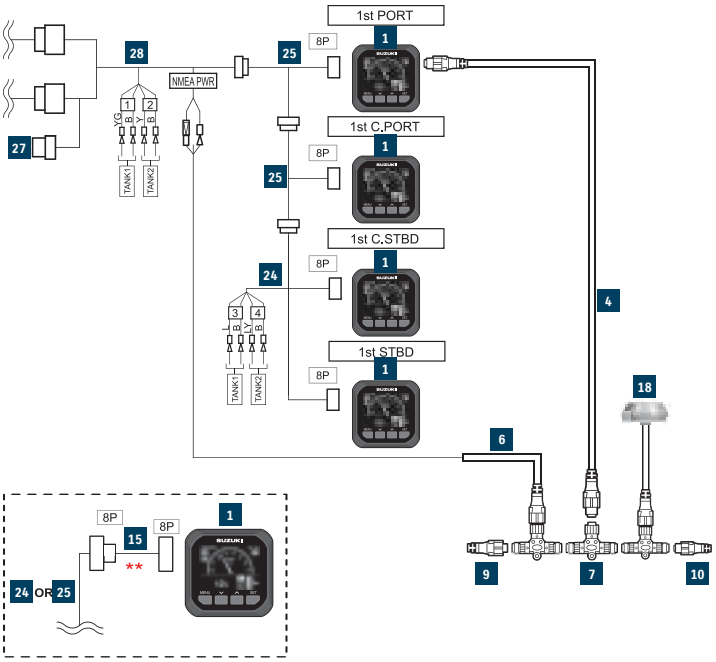

No.	Part Number	Part Name	Qty.	
1	Suzuki Multifunction Gauge	34011-96L41	4	SMG directly plugs in to BCM Harness
4	2' N2K Cable	990C0-88L00-KIT*	1	Part number 990C0-88104, included in N2K Kit
6	N2K Power Cable			Part number 990C0-88112, included in N2K Kit
7	N2K Tee			Part Number 990C0-88110, included in N2K Kit
9	Terminator (F)			Part number 990C0-88113, included in N2K Kit
10	Terminator (M)			Part number 990C0-88114, included in N2K Kit
15	2' Gauge Extension	36667-96L60	1	Optional, only use if necessary
18	Paddle Wheel Sensor	990C0-88317	1	Choose Either (Optional, only if speed data is required)
	GPS Module (Pictured)	990C0-88122		
24	Multi-Gauge Adapter**	36667-96L50	1	Same as above, but has connections for tanks 3 and 4
25		36667-96L40	2	Used to Connect Multiple SMG's
27	Terminal Resistor	33926-98L00	-	Included in SPC 2.0 Control Kits
28	BCM Harness #1, Quaruple	36623-98L40	-	Included in SPC 2.0 Control Kits

*Only required if adding a speed source
**Can use 2 x 36667-96L40 + 1 x 36667-96L50, or 3 x 36667-96L40 if tanks 3 and 4 not required

QUADRUPLE ENGINE - DUAL STATION

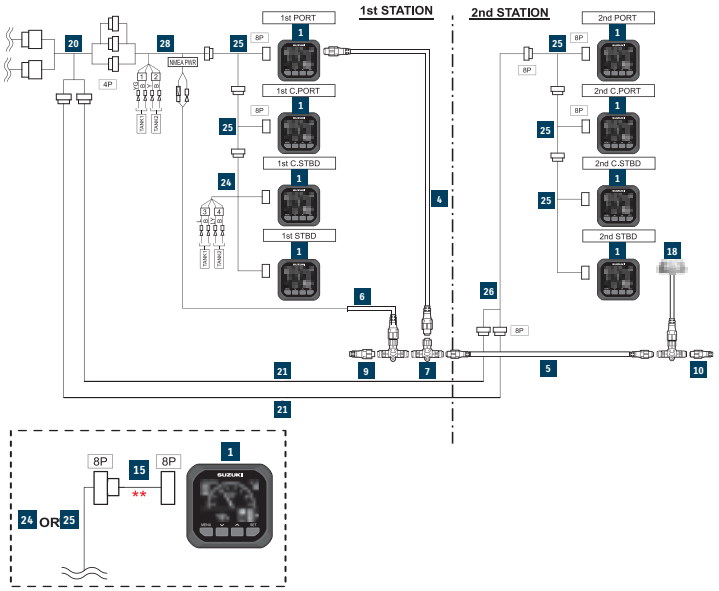

No.	Part Number	Part Name	Qty.	
1	Suzuki Multifunction Gauge	34011-96L41	8	SMG directly plugs in to BCM Harness
4	2' N2K Cable	990C0-88L00-KIT*	1	Part number 990C0-88104, included in N2K Kit
6	N2K Power Cable			Part number 990C0-88112, included in N2K Kit
7	N2K Tee			Part Number 990C0-88110, included in N2K Kit
9	Terminator (F)			Part number 990C0-88113, included in N2K Kit
10	Terminator (M)			Part number 990C0-88114, included in N2K Kit
5	15' N2K Cable	990C0-88107	1	Choose required length from station 1 to station 2
	25' N2K Cable	990C0-88108		
15	2' Gauge Extension	36667-96L60	1	Optional, only use if necessary
18	Paddle Wheel Sensor	990C0-88317	1	Choose Either (Optional, only if speed data is required)
	GPS Module (Pictured)	990C0-88122		
20	2nd Station Main Harness	36622-98L00	-	Included in SPC 2.0 Control Kits
21	21' Main Harness	36620-98L00	-	For illustration purposes only
	31' Main Harness	36620-98L10		
24	Multi-Gauge Adapter**	36667-96L50	1	Same as above, but has connections for tanks 3 and 4
25		36667-96L40	5	Used to Connect Multiple SMG's
26	BCM Harness #2, Quadruple	36624-98L20	-	Included in SPC 2.0 Control Kits
28	BCM Harness #1, Quaruple	36623-98L40	-	Included in SPC 2.0 Control Kits

*Only required if adding a speed source
**Can use 2 x 36667-96L40 + 1 x 36667-96L50, or 3 x 36667-96L40 if tanks 3 and 4 not required

SUZUKI MULTI-FUNCTION DISPLAY



Suzuki Multi-Function Display Connected to Earth

The Suzuki Multi-Function Display and its features offers you access to all the information you need for The Ultimate boating experience. Control at the touch of a finger with the touch screen glass top design, available in 12” and 16” sizes.

Key Benefits:

The Suzuki Multi-Function Display gives you access to all of your Suzuki engine information, so you can easily and quickly see the performance of your outboard(s) in one clear view. Additional features include chartplotting, sounder, radar, and weather. Detailed cartography chip not included. Transducers, radar antennas, and weather antennas must be purchased from your local Furuno dealer. Additional charge to unlock radar and sounder functions on 12” and 16” models, unlock codes can be purchased from your local Furuno dealer.





Suzuki Multi-Function Display - SMD7 and SMD9

Powerful Technology in a compact design that is compact enough to fit on small runabouts and center consoles. The 7" and 9" touch screens enable you to operate the chartplotter with built-in fish finder at the touch of a finger.



Part Number	Description	Notes
34901-98L01	SMD 7" Kit (Inclues Gateway)	Gateway included, need engine engine adapter (Mech or SPC)
34901-98L11	SMD 9" Kit (Includes Gateway)	Gateway included, need engine engine adapter (Mech or SPC)
34900-98L21	SMD 12"	Requires gateway (1 per engine) and engine adapter
34900-98L31	SMD 16"	Requires gateway (1 per engine) and engine adapter
34923-96L01	SMD Gateway	Required for all installations, 1 gateway per engine, all configurations
36661-96L30	Mechanical Engine Adapter	Required for all mechanical engine installs, need 1 per engine
36661-96L20	SPC Engine Adapter	1-3 engine configs require 1 adapter, 4 engine configs require 2
36667-96L00	SPC Multi Engine Adapter	1-3 engine configs require adapter 1, 4 engine configs require 2



SUZUKI C-10 & NMEA 2000 ACCESSORIES PARTS LIST



The Suzuki Color Display is a LED high-resolution screen that has very sharp, crisp lines and is extremely easy to read. It has a bonded glass front screen so whether it be sun, salt, or UV rays, your screen will never blur or fade like a plastic cover. The C-10 has its mounting points in the front so there is no need to crawl under your console to mount it. There is one easy connection to Suzuki's digital harness. Save your favorite programming and update the display using the Mini USB port. The C-10 is able to monitor functions such as RPM, Speed*, Water Pressure*, Fuel Level*, Fuel Consumption, Coolant Temperature, Oil Level, Oil Temperature, Trim Level, Hours, or Volts. The C-10 is able to monitor up to 2 engines simultaneously. The Suzuki C-10 can be retro-fitted, to replace a 4" round gauge. (* additional sensors required)

Suzuki Color Display Kit

990C0-03C10-KIT
Suzuki Color Display Kit includes:

Part Number	Description	Qty
990C0-03C10	Suzuki Color Display	1
990C0-88114	Male Terminator	1
990C0-88113	Female Terminator	1
990C0-88110	NMEA "T"	2
990C0-88112	Power Cable + Network T	1
990C0-88149-357	Interface Cable	1

How It Works

- Bright, full color 320 x 240 LED screen makes it easier to see menus and screen detail in both full sunlight and night operation
- Fits standard 3-3/8" gauge cutout
- Each C-10 gauge will display engine info from 1 or 2 engines
- Preconfigured pages or create your own
- Micro USB for software updates (update cable required)
- Power and data through single NMEA 2000 micro-C connector
- Low profile front mount – 8 mm of dash (rear mount option for "glass dash" installations)

Suzuki C-10 Cover

This cover protects the Suzuki Color Display (C-10) from the elements. Use the cover to extend the life of your Suzuki C-10 Color Gauges.



990C0-10C10	Suzuki C10 Cover

SENSORS



GPS Antenna with Compass

Suzuki has upgraded its GPS Antenna to include compass heading.

990C0-88122	GPS Antenna with Compass Heading

Fluid Level Sensor

Monitors fluid levels such as fuel, live well water level, etc. 10 ft. cable.

990C0-88217	Fluid Level Sensor

Speed Sensor

Paddle wheel-type speed sensor. 10 ft. cable.

990C0-88317	Speed Wheel

Temperature Sensor

Surface Water Temperature sensor. 10 ft. cable.

990C0-88318	Temperature Sensor

Water Pressure Sensor

990C0-88339	Water Pressure Sensor

INTERFACE CABLES

Engine Interface Cables



DF9.9B thru DF350A Suzuki Outboards can connect to the system using the exclusive Engine Interface. (Adapter Cable also needed for DF115BG/140BG/150AP/175AP/200AP/250AP/300AP/300B/350A)

990C0-88149-357	Software Version 3.7 (subject to change)
990C0-88149-294	Software Version 2.9 (subject to change)

NMEA 2000 COMPONENTS

NMEA 2000 Extension Cables



NMEA 2000 Extension Cable allows compatible sensors or other devices to be added by the use of T-Connectors throughout the system.

990C0-88104	2' Connection cable
990C0-88105	6' Connection cable
990C0-88107	15' Connection cable
990C0-88108	25' Connection cable

Power Cable



Fused(3A) lead connects extension cable to the power source.

990C0-88112	Single Power Cable (Includes Network T)

Quad Power Node



Allows network to be powered from multiple power sources (key switch, accessory switch, etc.).

990C0-88130	Quad Power Node

T-Connector



T-Connector for NMEA 2000 system.

990C0-88110	T-Connector
990C0-88109	Quad-T

Power Isolation

The NMEA 2000 power isolator makes sure the NMEA 2000 power from the engines and system power are kept separate.

990C0-88115	Network Power Isolator (not shown)

NMEA Adaptor

Used to connect a new style NMEA device net connector to an older network with Blue T's. Used to connect an early Blue Connector device to the later NMEA T.

990C0-88137	NMEA Device to Blue "T"

Terminating Resistors

120 ohm Terminating Resistors are required for any open cable ends in the NMEA 2000 system.

990C0-88113	Terminator – Female
990C0-88114	Terminator – Male

Suzuki Engine Connect Gateway

The Suzuki Engine Connect Gateway provides Suzuki engine information, diagnostic codes and proprietary pop-up messages on compatible Simrad and Lowrance Multi-Function display (MFD) units.

Note: Do not utilize C10 gauges with the Suzuki Connect Gateway. Only one Suzuki Connect Gateway is required per vessel. In multiple engine applications, each additional engine will require a standard Suzuki engine interface."

990C0-88171	Suzuki Connect Gateway

SUZUKI PRECISION CONTROL 1.0

The following control sets and related accessories are compatible with Suzuki 3-Series and prior digital engines.

Suzuki Precision Control 1.0 Compatible with 3-series Engines and prior only			Single Engine Control Kit			Dual Engine Control Kit		Triple Engine Control Kit		Quadruple Engine Control Kit	
			67000-98JE8	67000-98JM5	67000-98JF6	67000-98JG6	67000-98JH4	67000-98JJ5	67000-98JK4	67000-98J75	67000-98J85
			Binnacle	Flush Mount	2nd Station Binnacle	1st Station	2nd Station	1st Station	2nd Station	1st Station	2nd Station
CATEGORY	PART #	DESCRIPTION									
Control Boxes	67200-98J06	Binnacle-Mount R/C Box	1	-	1	-	-	-	-	-	-
	67200-98J14	Dual Binnacle-Mount R/C Box	-	-	-	1	1	1	1	1	1
	67200-98J23	Flush-Mount R/C Box	-	1	-	-	-	-	-	-	-
Control Panel Assemblies	37100-98J11	Single Engine Control Panel Assy	1	1	1	-	-	-	-	-	-
	37100-98J21	Dual Engine Control Panel Assy	-	-	-	1	1	-	-	2	2
	37100-98J31	Triple Engine Control Panel Assy	-	-	-	-	-	1	1	-	-
Key Switch	37100-98J07	Main Power Key Switch Assy	1	1	-	1	-	1	-	1	-
Troll Mode	37860-87L00	Troll Mode Control Switch	1	1	1	1	1	1	1	1	1
Emer. Switch	37803-93J06	Emergency Switch Panel	-	-	1	-	1	-	1	-	1
Buzzer	38500-93J90	Warning Buzzer	1	1	1	1	1	1	1	2	2
	09407-14403	Warning Buzzer Clamp	1	1	1	1	1	1	1	2	2
Boat Control Module (BCM)	36770-98J13	Boat Control Module (BCM)	1	1	1	1	1	1	1	-	-
	36770-98J21	Boat Control module (BCM)	-	-	-	-	-	-	-	2	2
BCM Components	36775-98J00	BCM Holder (L)	1	1	1	1	1	1	1	2	2
	36776-98J00	BCM Holder (R)	1	1	1	1	1	1	1	2	2
	33911-88BL0	BCM-Connect Cap	1	1	1	-	-	-	-	-	-
	33925-93J00	BCM Cushion	1	1	1	1	1	1	1	2	2
BCM Harnesses	36623-98J21	BCM #1 Wiring Harness	1	1	-	-	-	-	-	-	-
	36623-98J30	BCM #1 Wiring Harness	-	-	-	1	-	1	-	-	-
	36624-98J02	BCM #2 Wiring Harness	-	-	1	-	-	-	-	-	-
	36624-98J11	BCM #2 Wiring Harness	-	-	-	-	1	-	1	-	-
	36623-98J40	BCM Quadruple Wiring Harness	-	-	-	-	-	-	-	1	1
Misc.	33926-98J00	Terminal Resistor	2	2	-	2	-	2	-	4	-
	36625-98J10	Battery Sub-Lead	1	1	-	1	-	1	-	2	-
	36622-98J00	Dual Station Main Harness	-	-	1	-	1	-	1	-	2
	36621-98J00	Dual Engine 1st Station Harness	-	-	-	1	-	-	-	-	-
	36621-98J10	Triple Engine 1st Station Harness	-	-	-	-	-	1	-	-	-
Main Harnesses	36620-98J33	Main Wiring Harness 21ft./6.5m	1*	1*	1*	1*	1*	1*	1*	1*	1*
	36620-98J42	Main Wiring Harness 31ft./9.5m									
	36620-98J51	Main Harness Extention 6.5ft./2.0m	1**	1**	1**	1**	1**	1**	1**	1**	1**

* Main harness not included in kits, select required length
** Only if necessary

ENGINE ADAPTERS

Adapters

Adapter must be used with Engine Interface to connect the DF150AP/175AP/ 200AP/250AP/300AP/ 350A Outboard to the system.



990C0-88131	Single Engine Adapter (not shown)
990C0-88132	Dual Engine Adapter (shown below)
990C0-88133	Triple Engine Adapter (not shown)
990C0-88132 x2	Quad Engine Adapter (not shown)
990C0-88136	NMEA 2000 Adapter – to connect at engine SDS connector. 6' long. (shown on the left)
36660-89L02	Adapter for use with DF9.9B – DF30A. 21' long.

SUZUKI ANALOG INSTRUMENTS



Suzuki Genuine Instruments are custom-designed to provide the quality, reliability and value you expect from Suzuki Products. The wide selection allows you to accurately monitor a variety of essential functions. All instruments are lighted for night-time boating and feature standard 2" and 4" diameters for easy installation.



White

Black

4" Tachometers

7,000 max RPM Tachs are available with or without 4-Stroke monitor functions. Monitor functions include: Low Oil Pressure Warning, Engine Temperature Warning, Check Engine Warning and Over-Rev Limit Warning.

34200-93J14	White – With monitor functions
34200-93J34	White – Without monitor functions
34200-93J02	Black – With monitor functions
34200-93J22	Black – Without monitor functions

Trolling Mode Control Switch



Allows the use of the Suzuki Troll Mode on equipped engines. When Troll Mode is engaged, this switch allows for adjustments of engine RPM in 50 RPM increments, from idle to 1,200 RPM to make setting and maintaining a trolling speed easy. Consult owner's manual or Suzuki Outboard Dealer for additional details on Suzuki Troll System operation.

37860-98L00
DF40A/50A/50AV/60A/60AV/70A/ 90A/115A/115SS/140A/150A/150A/175A/200A

4" Tachometer With Suzuki Troll Mode Scale



White

Black

Easy to read 4" Tachometer has a scale from 0-7,000 RPM for standard use and a secondary scale from 0-3,000 RPM with markers at 50 RPM intervals for use with the Suzuki Troll Mode System. Gauge also includes warning lamps for Engine Temperature, Low Oil, Check Engine, and Over-Rev. When in Troll Mode, Over-Rev Lamp stays on to indicate that Troll Mode has been engaged. The secondary RPM scale is designed to make setting and maintaining a lower troll speed simple. Fits DF40A/50A/50AV/60A/60AV/70A/90A/115A/140A (DF300/350A requires C-10 gauges) *See engine owner's manual for information about Suzuki Troll Mode System. Not all models come equipped with trolling mode system. Accessory Troll Mode Switch is required for Suzuki Troll Mode System use. Suzuki recommends the use of this gauge for trolling use.

34200-93J54	White - DF40A/50A/50AV/60A/60AV/70A/90A/115SS/115BG/140BG/ 140A/150SS/150A/175A/200A/200SS (DF150AP/175AP/200AP/250AP/300/ 300B/350A requires digital instrumentation)
34200-93J43	Black - DF40A/50A/50AV/60A/60AV/70A/90A/115SS/115BG/140BG/ 140A/150SS/150A/175A/200A/200SS (DF150AP/175AP/200AP/250AP/300/ 300B/350A requires digital instrumentation)



4" Speedometers

Bourdon-tube type speedometer with readings in M.P.H. and Km/h. Includes vinyl tube, plus all installation instructions and hardware. *Pitot tube 34190-87D00 must be ordered separately.

34100-93J13	White - 80 mph
34100-93J33	White - 50 mph
34100-93J02	Black - 80 mph
34100-93J22	Black - 50 mph
34190-87D00*	Pitot Tube



2" Hour Meter

12 volt electric motor driven meter indicates the number of hours your outboard motor has been operated to indicate when periodic services are necessary.

34500-93J13	White
34500-93J02	Black



2" Trim Gauge

Magnetic type gauge shows trim angle for optimum performance and effeciency.

34800-93J13	White
34800-93J02	Black



2" Voltmeter

A well charged battery is essential for quick and easy starts. Monitor the charging system using a Voltmeter.

34600-93J13	White
34600-93J02	Black



2" Fuel Gauge

Operates on 12 volts with magnetically damped needle. Works with most fuel tank sending units.

34300-93J14	White
34300-93J02	Black



2" Water Pressure Gauge 15 psi

Bourdon-tube type gauge measures cooling water pressure. Instructions and dash installation hardware included. Order Installation Kit for appropriate model.

34650-93J33	White
34650-93J22	Black



Water Pressure Gauge Installation Kits

Kit includes fittings and hoses needed for motor to gauge connection.

34660-93J02	DF225/250/250AP/300A
34660-96J01	DF150/150AP/150A/ DF175/175AP/175A/200A
34660-99E01	DF60/70
34660-87J01	DF40/50
34660-90J04	DF40A/50A/50AV/60A/ 60AV/70A/90/DF90A/ 115/115A/140/140A

SUZUKI ANALOG INSTRUMENTS



Economically priced, high- quality instruments feature easy plug-in wiring connections, perimeter-lighted dial, chrome bezels, contoured pointers and fog-resistant glass lenses. All use standard 2" or 4" diameters for easy dash installation.



White

Black

4" Speedometer

Easy to read 4" Speedometer features include lighted dial, contoured pointer and fog-resistant glass lens. *Requires Tubing 99105-80009.

990C0-80102	White 60 mph
990C0-80009*	Speedometer Tubing (not shown)
990C0-80002	Black 65 mph
990C0-80009*	Speedometer Tubing (not shown)



White

Black

4" Tachometers

7,000 max R.P.M. Tachs are available with or without 4-Stroke monitor functions. Monitor functions include: Low Oil Pressure Warning, Engine Temperature Warning, Check Engine Warning and Over-Rev Limit Warning.

990C0-80101	White – With monitor functions
990C0-80100	White – Without monitor functions
990C0-80001	Black – With monitor functions
990C0-80000	Black – Without monitor functions

2" Engine Monitor Gauge

Engine Monitor Gauge for 4-stroke engines helps alert you to low oil pressure, high engine temperature and engine over-rev

990C0-80108	White
990C0-80008	Black



White

Black

2" Trim Gauge

To help maintain steering stability and good performance, proper trim angle is essential. The Trim Gauge helps you monitor the trim angle. For use with 2-wire senders.

990C0-80105	White
990C0-80005	Black



White

Black

2" Digital Hour Meter

Handy Hour Meter helps you keep track of the time between services and total running time.

990C0-80110	White
990C0-80010	Black



White

Black

2" Fuel Gauge

Adding a Fuel Gauge can help you monitor fuel level. Connects easily using your boat's fuel sending unit harness.

990C0-80103	White
990C0-80003	Black



White

Black

2" Voltmeter

A well charged battery is essential for quick and easy starts. Monitor the charging system by using a Voltmeter.

990C0-80106	White
990C0-80006	Black



White

Black

2" Water Pressure Gauge 30 psi

Bourdon-tube type gauge measures cooling water pressure. Instructions and dash installation hardware included. Order Installation Kit for appropriate model.

990C0-80104	White
990C0-80004	Black



White

Black

Water Pressure Gauge Installation Kits

Kit includes fittings and hoses needed for motor to gauge connection.



34660-93J02	DF225/250/250AP/300A
34660-87J01	DF40/50
34660-96J01	DF150/150AP/150A/DF175/175AP/175A/200AP
34660-99E01	DF60/70
34660-90J04	DF40A/50A/50AV/60A/60AV/70A/90A/90/115/115A/140/140A

CABLES AND RIGGING



Switch Panel Assemblies

Genuine Suzuki Switch Panel Assemblies are designed to match and connect with other Suzuki components for easy installation and trouble-free operation.



Trolling Mode Control Switch

Allows the use of the Suzuki Troll Mode on equipped engines. When Troll Mode is engaged, this switch allows for adjustments of engine RPM in 50 RPM increments, from idle to 1200 RPM to make setting and maintaining a trolling speed easy. Consult owner's manual or Suzuki Outboard Dealer for additional details on Suzuki Troll System operation.

37860-98L00	DF40A/50A/50AV/60A/60AV/70A/90A/115A/115SS/140A/150A/150A/175A/200A



Dual Engine Ignition and Emergency Stop Switch Panel Assembly

Dual Engine Ignition and Emergency Stop Switch Panel Assembly. Includes wiring, hardware and stop switch lanyard.

37100-96J17



Emergency Stop Switch Panel Assembly

Emergency Stop Switch Panel Assembly. Includes wiring, hardware and lanyard.

37803-93J06



Single Engine Ignition Switch Panel Assembly

Single Engine Ignition Switch Panel Assembly. Includes wiring and hardware.

37100-96J01	DF40A/50A/50AV/60A/60AV/70A/90A/115A/115SS/140A/150A/150A/175A/200A



Single Engine Ignition and Emergency Stop Switch Panel Assembly

Single Engine Ignition and Emergency Stop Switch Panel Assembly. Includes wiring, hardware and stop switch lanyard.

37100-96J27



P.T.T. Switch Panel Assembly

P.T.T. Switch Panel Assembly. Includes wiring and hardware.

37805-93J00

Aux Power Trim Switch (not shown)

Allows quick connection of remote trim switch with easy plug-in bullet connectors.

36647-93J00



Wiring Harness

Main Wiring Harness. Order length as needed for rigging applications.

36620-93J54	16' Wiring Harness
36620-93J04	21' Wiring Harness
36620-93J64	26' Wiring Harness
36620-93J12	6' Wiring Harness Extension
36620-93J42	10' Wiring Harness Extension



Battery Isolator Lead Set

Used for charging auxiliary battery.

33830-96J00	DF150/175 (S/N Models up to 499999)
33830-98J11	DF150/175 (S/N Models 510001 and newer) DF200AP/175AP/ 150AP/250A/300A/300B
33830-98J02	DF300 (Models up to 199999)



Thru-Hull Fitting And Hose Kits

Thru-Hull Fitting and Hose Kit can handle single, dual and triple motor installations. One Thru Hull Kit and one Adaptor Kit is necessary for each outboard used.

990C0-20010 Includes:	Black Thru Hull Kit • 1 - 4' Black Hose • 1 - Fuel Hose Port • 1 - 2" Thru-Hull Fitting • 2 - Stainless Steel Bolts & Nuts

990C0-20020 Includes:	White Thru Hull Kit • 1 - 4' Black Hose • 1 - Fuel Hose Port • 1 - 2" Thru-Hull Fitting • 2 - Stainless Steel Bolts & Nuts

Adapter Kits

Kit Includes:
1 - Through-Hull attachment
2 - pins,
2 - e-rings



67300-98J10	DF115A/140A/150/175/200A/ 200AP/DF250AP/300A/300B/ 350A 2016-Newer
67300-93J01	DF150/175/200/225/250/300 2006-2015
67300-90J00	DF70A/90A/115/140 2006-2015

Suzuki Performance Remote Control Cables

Suzuki Performance Cables have a unique design that incorporates a patent-pending splined core. Ridges on the core allow a close fit to the cable's inner liner with minimum contact, allowing the core to glide back and forth smoothly. All cables are factory tested and approved for heavy use applications. Order cable length as needed.

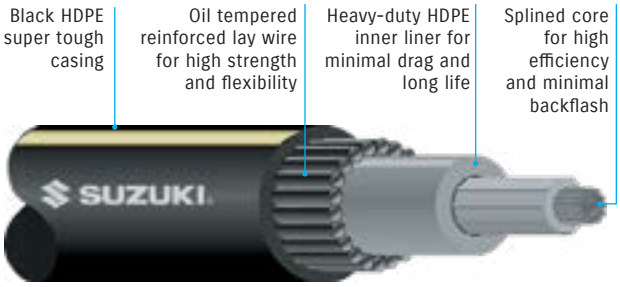

990C0-11002-008	8'	990C0-11002-014	14'	990C0-11002-020	20'	990C0-11002-026	26'
990C0-11002-009	9'	990C0-11002-015	15'	990C0-11002-021	21'	990C0-11002-027	27'
990C0-11002-010	10'	990C0-11002-016	16'	990C0-11002-022	22'	990C0-11002-028	28'
990C0-11002-011	11'	990C0-11002-017	17'	990C0-11002-023	23'	990C0-11002-029	29'
990C0-11002-012	12'	990C0-11002-018	18'	990C0-11002-024	24'	990C0-11002-030	30'
990C0-11002-013	13'	990C0-11002-019	19'	990C0-11002-025	25'		

Replacement Lanyard

Replacement Lanyard for Emergency Stop Switch.

37823-92E02



Replacement Ignition Keys (not shown)

37141-99E00	Key 931	37141-99E60	Key 937
37141-99E10	Key 932	37141-99E70	Key 938
37141-99E20	Key 933	37141-99E80	Key 939
37141-99E30	Key 934	37141-99E90	Key 940
37141-99E40	Key 935	37141-99EA0	key 941
37141-99E50	Key 936	37141-99EB0	Key 942

STEERING





Tiller Handle Kits

New fully-integrated tiller handle with digital tachometer display. Includes redesigned, more ergonomic shift lever.

PEARL NEBULAR BLACK	
63002-88L29-YAY	DF40A/50A
63002-88L18-YAY	DF50AV/60A/60AV
63002-87L18-YAY	DF70A/90A
63002-90J38-YAY	DF115A



Digital Tachometer



Shift Lever



Angle Adjustable Bracket



Tiller Handle Kits

Tiller Handle Kits are designed for easy installation for selected electric start models. Kit includes ignition switch, engine stop switches, wiring harness, cables and grommets.

63002-87J26-0EP	DF40/50	'05 – '09
63002-88L33-0EP	DF40A/50A/60A	'10 – Current
63002-87L09-0EP	DF70A/90A	'09 – Current
63002-90J41-0EP	DF90/115 w/ Hydraulic Tensioner	'05 – Current



Dual Cable Steering Kit

Kit allows you to attach two steering cables for added reliability.

990C0-10004	DF150 – DF250



Drag Link Kits

Corrosion-resistant stainless steel Drag Links are specially designed for use with Suzuki Outboard Motors.

67701-99J02	DF9.9B–DF20A	'10 – Current
67701-93E12	DF9.9/15	'97 – '10
67701-94L00	DF25A/30A	
67701-87J11	DF40/50	'99 – '10
	DF40A–60A/200–250	'10 – Current
	DF60/70	'98 – '10
67701-87L01	DF70A/90A	'09 – Current
67701-90J01	DF90/115/140A	'01 – Current
67701-96J00	DF150–175/200A/AP	'06 – Current
67700-93J00	DF225/250	'04 – Current



Twin Engine Adapter Plate Set

Adapter plates are used when installing a tie bar on a D115A/140A.

99105-10005	DF115A/140A
	*Does NOT fit DF90A



Dual Engine Tie Bar

Stainless steel Tie Bar for dual engine steering, adjustable up to 36".

990C0-10006	DF40A – DF140A

FUEL SYSTEM



Compact Water Separator/Fuel Filter

Compact size Water Separator/Fuel Filter is ideal for smaller boat-motor combinations of up to 140 H.P. Not for 150 and above.

99105-20006	Replacement Filter
99105-20006-ASY	Complete Assembly
99105-20006-BWL	Bowl and Drain Valve Assembly

Water Separator/ Fuel Filter

State-of-the-art filter removes water and other contaminants from the fuel before they reach your engine. It features a transparent removable bowl for easy viewing of fuel condition and a drain valve for water and other impurities. Due to the high flow rate capabilities of this filter system, a special large diameter thread is used. Use only Genuine Suzuki Replacement Filter 99105-20005. Applicable to all models, recommended 150 and up.

99105-20005	Replacement Filter
99105-20005-ASY	Complete Assembly
99105-20004-BWL	Bowl and Drain Valve Assembly



Bowl Wrench

99105-20003	Bowl Wrench



Plastic Fuel Tanks*

Constructed of tough, lightweight, high-density polyethylene and made to CARB / EPA standards.

65000-99J01	3 Gallon Tank without Fuel Level Gauge, 11mm connector
65000-95J01	6.6 Gallon Tank with Fuel Level Gauge, 13mm connector

* Not for use with DF 4/6 without fuel hose with pressure regulator. See dealer for details.

FUEL CONNECTORS – MOTOR SIDE

Male connectors are located on the motor side, for fuel hose attachment.



65720-985L1	OD:11mm Plated Brass	DT3.5 – 65



65720-955L1	OD:13mm Plated Brass	DT75 – 140A



65720-94403	OD:13mm Plastic	DT4 – 65



65720-94403	OD:13mm Plastic	DT4 – 65



65720-986L0	Plastic	DF4 – 140A
65721-87D00	OD:13mm Plastic (not shown)	DT150 – 225

FUEL HOSE CONNECTORS

Quick connect and disconnect female fittings fit either hose end.



65750-98506	ID:11mm	Metal for small diameter hoses



65750-95501	ID:13mm	Metal for small diameter hoses



65750-95501	ID:13mm	Metal for small diameter hoses



65750-94404	ID:13mm Plastic	DT4 – 140A



65750-87J11	Plastic	DF4 – 140A

FUEL TANK CONNECTORS

Fuel tank connectors are available in stainless steel with metric thread and plated brass with 1/4" NPT.



65720-98591	OD:11mm Metric	All Models



65740-95501	OD:13mm Metric	All Models



99105-00192	OD:11mm 1/4" NPT	U.S. Tanks



99105-00193	OD:13mm 1/4" NPT	U.S. Tanks

PROPELLERS



Propeller selection is very important in the performance of your boat. Acceleration, speed, fuel efficiency, stability and engine RPM all are affected by the propeller selected. Operating requirements and conditions will also affect which design, style and pitch of propeller you may choose to meet your individual needs. The boat and engine combination may have already been tested by your dealer or the boat manufacturer for the appropriate propeller size. Your Suzuki Dealer can assist you with the process to determine the correct propeller for your application.

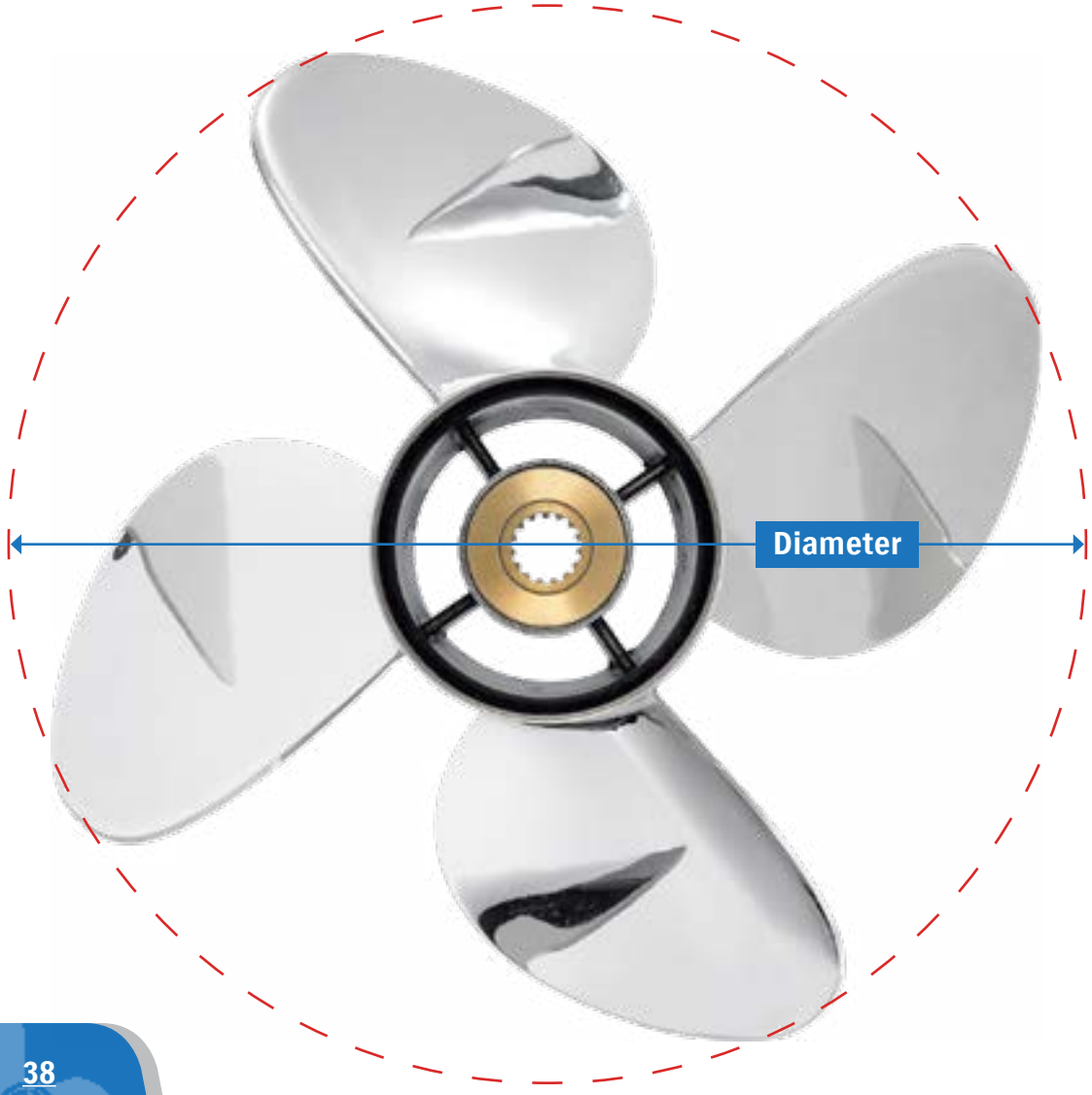

Stainless Steel Propellers

Suzuki Stainless Steel Propellers offer higher performance and greater durability than aluminum propellers. The aggressive design of these propellers enhances the overall performance of your boat and the durability of the stainless steel construction will give you long term dependability. Your Suzuki Stainless Steel Propeller is also fitted with a rubber cushion hub to help absorb vibration and shock.

Propeller Sizing

When referring to propeller size, such as 3 x 13 x 18, the first number indicates the number of blades, the second number details the diameter of the propeller in inches and the third number is the pitch of the propeller in inches. The pitch is the most significant number in the description. The diameter is usually predetermined by the propeller engineers and is based on the size and series of the engine.

Diameter

Diameter is considered to be the distance across an imaginary circle that is made when a propeller is rotated. Diameter is determined during the engineering process of designing a propeller and is usually based on requirements to meet the needs of engine size, gear case design, horsepower and speed.

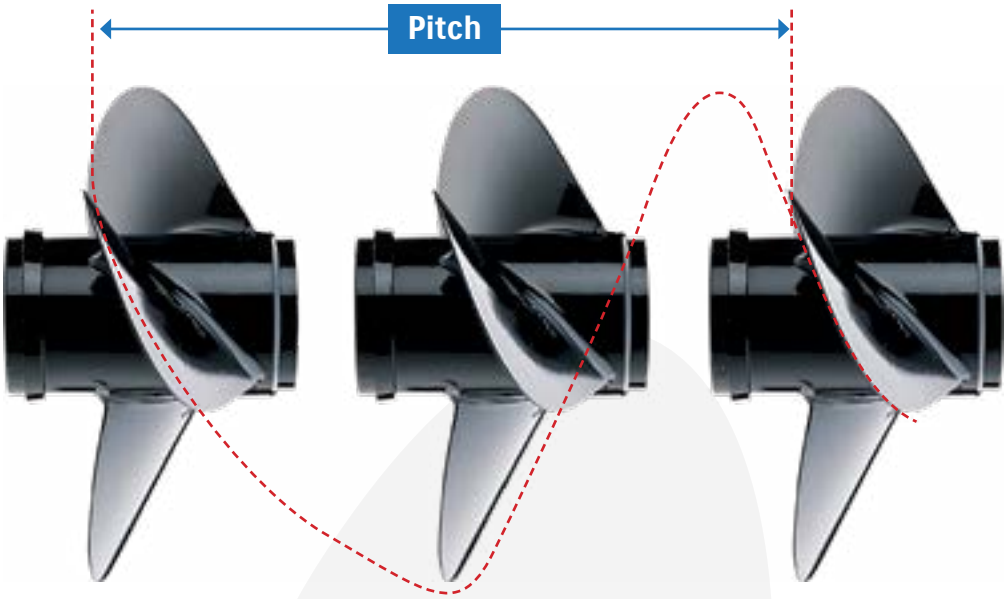

Pitch

Pitch is used to describe the theoretical distance that a propeller “cork screws” through the water in inches of forward travel. In theory, an 18” pitch propeller would move ahead 18” with each complete revolution of a propeller. There is always some percentage of inefficiency as water conditions, boat weight and propeller style are introduced into the performance equation. The lower the “slip factor,” the more efficiently the propeller will perform and the faster the speed at a given engine RPM. Lower pitches accelerate faster, but have a lower top end speed. Higher pitches have a slower acceleration, but may attain higher top speeds. An inch of pitch generally is equal to 150 – 200 engine RPM at wide open throttle (WOT). If pitch is increased by an inch, RPM will decrease by 150 – 200 RPM at WOT. If pitch is decreased by an inch, RPM will increase by 150 – 200 RPM at WOT. Always operate your boat/engine combination within the recommended RPM range guidelines as stated in your operator’s manual. Operating outside the recommended range can cause severe damage to your engine and may void the engine warranty.



Propeller Cup

Cup is used to reduce the slip and ventilation of the propeller. This will allow you to operate your engine at a higher transom mounting and allow you to use more trim for bow lift. The cup refers to the area along the trailing edge of the propeller blade that has an increased pitch in the last 1/2” of the blade surface and extends to the blade tip.

Rake

Rake is described as the angle, in degrees, that the propeller blades are mounted to the “barrel” of the propeller. The blades of a zero degree rake propeller are mounted perpendicular to the “barrel” of the propeller. The blades of a higher rake propeller angle more to the rear of the propeller. A propeller with a high rake design will hold the water on the blades longer during operation and will ventilate less at higher engine heights. High rake propellers will produce higher thrust that will help lift the bow of the boat more effectively.



Propeller Lock

Theft protection for your boat’s propeller, in and out of the water. Constructed of naval brass and stainless steel for long life. Easy to install. Also fits counter rotation models.

99105-30003	DF40 – 350A



Propeller Hardware Kits

Includes the spacer, cotter key, washer and nut to secure the propeller to the shaft Great for tackle or tool box. See following page for exact kit contents.

57630-99J00	DF8A/9.9A
57630-93900	DF9.9B/15A/20A
57630-96300	DF25A/30A
57630-94301	DF40A/50A/60A
57630-90J00	DF50AV/60AV
	DF70/90A
	DF115A/115BG/140A/140BG
57630-93L00	DF150A-DF300AP (Watergrip)
57630-92E00	DF150-DF300AP (Non-Watergrip)
58540-98L00	DF300B/DF350A Front
58640-98L00	DF300B/DF350A Rear

PROPELLERS



DF4/6 (Optional '03-'10)

Material	Blades	Diameter	Pitch	Part Number	DF4	DF6
Aluminum	3	7-1/2	6	58110-91JL0-019	'04-Current	'04-Current
Aluminum	3	7-1/2	6-1/2	58110-91JM0-019	'04-Current	'04-Current
Aluminum	3	7-1/2	7	58110-91JN0-019	'04-Current	'04-Current
Aluminum	3	7-1/2	6	58111-98602-019	'03	
Aluminum	3	7-1/2	6-1/2	58111-98641-019	'03	
Aluminum	3	7-1/2	7	58111-98651-019	'03	

Diameter and pitch are measured in inches. ■=Optional. Refer to the Bushing Application Chart.

DF9.9/15/20

Material	Blades	Diameter	Pitch	Part Number	DF9.9	DF15/20
Aluminum	3	9-1/4	7	58100-89L00-019	■	■
Aluminum	3	9-1/4	8	58100-90L41-019	■	■
Aluminum	3	9-1/4	9	58100-90L50-019	■	■
Aluminum	3	9-1/4	10	58100-90L60-019	■	■
Aluminum	3	9-1/4	11	58100-89L70-019	■	■
Aluminum	3	9-1/4	12	58100-89L50-019	■	■
Aluminum	3	9-1/4	10	58100-90L60-019	■	■
Aluminum	4	10	5	58100-94JA2-019	■	

Diameter and pitch are measured in inches. ■=Optional.

DF9.9B/15A/20A

Material	Blades	Diameter	Pitch	Part Number	DF15A/20A
Aluminum	3	9-1/4	8	58100-90L41-019	■
Aluminum	3	9-1/4	9	58100-90L50-019	■
Aluminum	3	9-1/4	10	58100-90L60-019	■
Aluminum	3	9-1/4	11	58100-89L70-019	■
Aluminum	3	9-1/4	12	58100-89L50-019	■

Diameter and pitch are measured in inches. ■=Optional.

DF25A/30A

Material	Blades	Diameter	Pitch	Part Number	DF25A/30A
Aluminum	3	10-1/4	9	58100-96372-019	■
Aluminum	3	10-1/4	10	58100-91L40-019	■
Aluminum	3	10-1/4	10	58100-96472-019*	■
Aluminum	3	10-1/4	11	58100-91L50-019	■
Aluminum	3	10-1/4	12	58100-96482-019	■
Aluminum	3	10-1/4	13	58100-96492-019	■
Aluminum	3	10-1/4	14	58100-95D01-019	■
Aluminum	3	10-1/4	15	58100-96462-019	■

Diameter and pitch are measured in inches. ■=Optional. *Thicker Blade

DF60/70

Material	Blades	Diameter	Pitch	Part Number	'98 - '09
Aluminum	3	14	11	58100-99E10-019	■
Aluminum	3	13-3/4	13	58100-99E00-019	■
Aluminum	3	13-1/2	15	58100-94500-019	■
Aluminum	3	13-1/4	17	58100-94512-019	■
Aluminum	3	13	19	58100-94522-019	■
Aluminum	3	13	21	58100-94532-019	■

Diameter and pitch are measured in inches. Extremely durable stainless steel propellers especially designed for high performance boats. ■=Optional. Type V Cupped aluminum propeller with press-in bushing.

Propeller Bushing Application

Applications	Bushing Type	Bushing	Stopper	Spacer	Washer	Nut
DF4 '03 Models	Push-In	58120-98600				58130-91JL0
DF4 '04 - Current Models	Press-In	58120-91JL0	57635-91JL0	58130-91JL0	58100-90L41-019	58100-90L41-019
DF6 '03 - Current Models	Press-In	58120-91JL0	57635-91JL0			58130-91JL0
DF9.9/9.9A/9.9B/15/15A/20A	Press-In	58120-89L00	57632-94J00	57633-93901	09160-12066	09141-12005
DF25/30 '00 - Current Models	Press-In	58120-96401	57632-96400	57633-96300	09160-14028	09141-14008
DF25 V-Twin	Press-In	58120-96401	57632-95J00	57633-96300	09160-14028	09141-14008
DF40/50	Press-In	58120-88L01	57632-95320	57633-94301	09160-18028	09141-18005
DF40A/50A/60A '10 - Current Models	Press-in	58120-88L01	57632-95320	57633-94301	09160-18028	09141-18005
DF60/70	Press-In	58120-95500	57635-95510	57633-95501	09160-18028	09141-18005
DF60/70	Press-In	58120-94520	57635-94511	57633-94500	09160-18028	09141-18005
DF70A/90A '09 - Current Models	Press-In	58120-90J00	57632-87L01	57633-90J02	09160-18028	09141-18005
DF90/115/140A	Press-In	58120-90J00	57635-90J01*	year specific	09160-18028	09141-18005
DF90/115/140A	Press-In	58120-90J00	57635-90J01*	year specific	09160-18028	09141-18005
DF90/115/140A '01 - '02 Models	Press-In	58120-90J00	57635-90J01*	57633-90J02	09160-18028	09141-18005
DF90/115/140A '03 - '08 Models	Press-In	58120-90J00	57635-90J01*	57633-90J02	09160-18028	09141-18005
DF115/140A Counter Rotation Models	Press-In	58120-90J00	57635-92J01*	year specific	09160-18028	09141-18005
DF150/175/200/200A/225/250/250AP/300/300AP	Press-In	58105-93J00	57632-93J11	57633-87D30	09160-18028	09141-18005
DF250SS	Press-In	58105-93J10	57632-93J21	57633-87D30	09160-18028	09141-18005

*Uses Spacer For Stopper, 57632-90J00

Watergrip Bushing Application

Applicable Model	Stopper	Propeller Bushing	Kit	INCLUDED IN KIT				
				Spacer	Washer	Stopper	Nut	Cotter Pin
DF2.5				-	-	-	58130-91JL0	09204-03003
DF4A/6A	57635-97L00	58120-91JL0	N/A	-	-	-	58130-91JL0	09204-03003
DF8A/9.9A	57632-94J00	58120-89L00	57630-99J00	-	09160-12066	-	09141-12005	09204-02004
DF9.9B/15A/20A	57632-94J00	58120-89L00	57630-93900	-	09160-12066	-	09141-12005	09204-02004
DF25A/30A	57632-91L00	58120-96401	57630-96300	57633-96300	09160-14028	-	09141-14008	09204-03003
DF40A/50A/60A	57632-95320	58120-88L01	57630-94301	57633-94301	09160-18028	-	09141-18005	09204-03003
DF50AV/60AV	57635-90J01	58105-90J00	57630-90J00	57633-90J02	09160-18028	-	09141-18005	09204-03003
DF70/90A	57632-87L01	58105-90J00	57630-90J00	57633-90J02	09160-18028	-	09141-18005	09204-03003
DF115A/115BG/140A/140BG	57635-92J01	58105-90J00	57630-90J00	57633-90J02	09160-18028	-	09141-18005	09204-03003
DF150-DF300 Non-Watergrip	57632-93L01		57630-92E00	57633-87D30	09160-18019	-	09141-18005	09204-03003
DF150A-DF300AP Watergrip	57632-93L11	58120-93L00	57630-93L00	57633-93L00	09160-18028	-	09141-18005	09204-03003
DF350A FRONT	58531-98L00	58520-98L00	58540-98L01	58541-98L00	-	58551-98L00	58561-98L01	-
DF350A REAR	58631-98L00	58520-98L00	58640-98L00	58641-98L00	09160-18019	-	09141-18005	09204-03003

DF40A/60A

Material	Blades	Diameter	Pitch	Part Number	'99 – Current
Aluminum	3	11-1/2	9	58100-88LC0-019	■
Aluminum	3	11-1/2	10	58100-88LD0-019	■
Aluminum	3	11-1/2	11	58100-88LE0-019	■
Aluminum	3	11-5/8	12	58100-88LA0-019	■
Aluminum	3	11-1/2	13	58100-88LB0-019	■
Aluminum	3	11-3/8	14	58100-88L52-019	■
Aluminum	3	11-1/4	15	58100-88L62-019	■
Aluminum	3	11-1/8	16	58100-88L72-019	■
Aluminum	3	11	17	58100-88LF0-019	■
Stainless Steel	3	11-3/4	10	990C0-00600-10P	■
Stainless Steel	3	11-3/4	11	990C0-00600-11P	■
Stainless Steel	3	11-3/4	12	990C0-00600-12P	■
Stainless Steel	3	11-3/4	13	990C0-00600-13P	■
Stainless Steel	3	11-3/4	14	990C0-00600-14P	■
Stainless Steel	3	11-3/4	15	990C0-00600-15P	■
Stainless Steel	3	11-3/4	16	990C0-00600-16P	■
Stainless Steel	3	11-3/4	17	990C0-00600-17P	■

Diameter and pitch are measured in inches. ■=Optional.

DF50AV/60AV/70A/90A/ 115/115A/115BG/140/140A/140BG

Material	Blades	Diameter	Pitch	Part Number	'99 – Current
Aluminum	3	14	9	990C0-00750-09P	■
Aluminum	3	14	11	990C0-00750-11P	■
Aluminum	3	14	13	990C0-00750-13P	■
Aluminum	3	13-7/8	15	990C0-00750-15P	■
Aluminum	3	13-3/4	17	990C0-00750-17P	■
Aluminum	3	13-3/4	19	990C0-00750-19P	■
Aluminum	3	13-3/4	21	990C0-00750-21P	■
Aluminum	3	13-3/4	23	58100-87LF0-019	■
Aluminum	3	13-1/2	15	990C0-00760-15P	■
Aluminum	3	14	17	990C0-00760-17P	■
Aluminum	3	14	19	990C0-00760-19P	■
Aluminum	3	14	21	990C0-00760-21P	■
Aluminum	3	14	23	990C0-00760-23P	■
Stainless Steel	3	14	15	990C0-00610-15P	■
Stainless Steel	3	14	16	990C0-00610-16P	■
Stainless Steel	3	14	17	990C0-00610-17P	■
Stainless Steel	3	14	18	990C0-00610-18P	■
Stainless Steel	3	14	19	990C0-00610-19P	■
Stainless Steel	3	14	20	990C0-00610-20P	■
Stainless Steel	3	14	21	990C0-00610-21P	■
Stainless Steel	3	14	22	990C0-00610-22P	■
Stainless Steel	3	14	23	990C0-00610-23P	■
Stainless Steel	3	14	24	990C0-00610-24P	■
Stainless Steel	3	14	25	990C0-00610-25P	■
Stainless Steel	3	14	26	990C0-00610-26P	■

Diameter and pitch are measured in inches. ■=Optional.

Counter Rotation 610 Series Propellers for DF50AV/60AV/70A/90A/115/115A/140/140A

Material	Blades	Diameter	Pitch	Part Number	'09 – Current
Stainless Steel	3	14	15	990C0-0061L-15P	■
Stainless Steel	3	14	16	990C0-0061L-16P	■
Stainless Steel	3	14	17	990C0-0061L-17P	■
Stainless Steel	3	14	18	990C0-0061L-18P	■
Stainless Steel	3	14	19	990C0-0061L-19P	■
Stainless Steel	3	14	20	990C0-0061L-20P	■
Stainless Steel	3	14	21	990C0-0061L-21P	■
Stainless Steel	3	14	22	990C0-0061L-22P	■
Stainless Steel	3	14	23	990C0-0061L-23P	■
Stainless Steel	3	14	24	990C0-0061L-24P	■

Diameter and pitch are measured in inches. ■=Optional.

Suzuki Watergrip® Propellers for DF150/150AP/175/175AP/200/200A/200AP/250AP/300A

Material	Blades	Diameter	Pitch	Part Number	DF150 – 300AP
Stainless Steel	3	16	17	990C0-00810-17P	■
Stainless Steel	3	16	18-1/2	990C0-00810-185	■
Stainless Steel	3	16	20	990C0-00810-20P	■
Stainless Steel	3	16	21-1/2	990C0-00810-215	■
Stainless Steel	3	16	23	990C0-00810-23P	■
Stainless Steel	3	16	24-1/2	990C0-00810-245	■
Stainless Steel	3	16	26	990C0-00810-26P	■
Stainless Steel	3	16	27-1/2	990C0-00810-275	■
Stainless Steel	3	15-1/2	17	990C0-00840-17P	■
Stainless Steel	3	15-1/4	19	990C0-00840-19P	■
Stainless Steel	3	15	21	990C0-00840-21P	■
Stainless Steel	3	14-3/4	23	990C0-00840-23P	■
Stainless Steel	3	14-1/2	25	990C0-00840-25P	■
Stainless Steel	3	14-1/2	27	990C0-00840-27P	■
Stainless Steel	4	15-1/4	20	990C0-00510-20P	■
Stainless Steel	4	15-1/4	22	990C0-00510-22P	■
Stainless Steel	4	15-1/4	24	990C0-00510-24P	■
Stainless Steel	4	15-1/4	26	990C0-00510-26P	■

Diameter and pitch are measured in inches. ■=Optional.

Suzuki Watergrip® Counter Rotation Propellers for DF150/150AP/175/175AP/200/200A/200AP/250AP/300A

Material	Blades	Diameter	Pitch	Part Number	DF150 – 300AP
Stainless Steel	3	16	17	990C0-0081L-17P	■
Stainless Steel	3	16	18-1/2	990C0-0081L-185	■
Stainless Steel	3	16	20	990C0-0081L-20P	■
Stainless Steel	3	16	21-1/2	990C0-0081L-215	■
Stainless Steel	3	16	23	990C0-0081L-23P	■
Stainless Steel	3	16	24-1/2	990C0-0081L-245	■
Stainless Steel	3	16	26	990C0-0081L-26P	■
Stainless Steel	3	15-1/2	17	990C0-0084L-17P	■
Stainless Steel	3	15-1/4	19	990C0-0084L-19P	■
Stainless Steel	3	15	21	990C0-0084L-21P	■
Stainless Steel	3	14-3/4	23	990C0-0084L-23P	■
Stainless Steel	3	14-1/2	25	990C0-0084L-25P	■
Stainless Steel	3	14-1/2	27	990C0-0084L-27P	■
Stainless Steel	4	15-1/4	20	990C0-0051L-20P	■
Stainless Steel	4	15-1/4	22	990C0-0051L-22P	■
Stainless Steel	4	15-1/4	24	990C0-0051L-24P	■
Stainless Steel	4	15-1/4	26	990C0-0051L-26P	■

Diameter and pitch are measured in inches. ■=Optional.

DF250SS

Material	Blades	Diameter	Pitch	Part Number	DF250SS
Stainless Steel	4	14 1/4	17	990C0-00622-17P	■
Stainless Steel	4	14-1/4	18	990C0-00622-18P	■
Stainless Steel	4	14-1/4	19	990C0-00622-19P	■
Stainless Steel	4	14-1/4	20	990C0-00622-20P	■
Stainless Steel	4	14-1/4	21	990C0-00622-21P	■
Stainless Steel	4	14-1/4	22	990C0-00622-22P	■
Stainless Steel	4	14-1/4	23	990C0-00622-23P	■
Stainless Steel	4	14-1/4	24	990C0-00622-24P	■
Stainless Steel	4	14-1/4	25	990C0-00622-25P	■
Stainless Steel	4	14-1/4	26	990C0-00622-26P	■
Stainless Steel	4	14-1/4	27	990C0-00622-27P	■
Stainless Steel	4	14-1/4	28	990C0-00622-28P	■
Stainless Steel	4	14-1/2	26	990C0-00630-26P	■
Stainless Steel	4	14-1/2	27	990C0-00630-27P	■
Stainless Steel	4	14-1/2	28	990C0-00630-28P	■
Stainless Steel	4	14-1/2	29	990C0-00630-29P	■
Stainless Steel	4	14-1/2	30	990C0-00630-30P	■

Diameter and pitch are measured in inches. n=Optional.
All 622 and 630 Series Propellers Require the 57632-93L10 and 57633-93L00 Stopper and Spacer, must purchase separately. Recommended for High Performance Applications Only

DF300B AND DF350A PROPELLERS AND TOOLS
A REVOLUTION IN INNOVATION



Development of Suzuki's First Contra-Rotating Propeller

After years of outboard design, Suzuki engineers knew that the shape of the lower unit and the design of the propeller would have a critical impact on performance. The increased power of the new engine required more powerful gears, and more powerful gears were typically larger. After considering alternatives, an innovative idea was proposed: design a contra-rotating dual propeller system. The contra-rotating propeller would certainly provide more "grip" underwater, and because contra-rotating propellers distribute the engine torque evenly over the two propellers, the torque per propeller decreases and gear diameter can be reduced. A reduction in gear diameter could then lead to the design of a smaller, more hydrodynamic gear case.



DF300B/350A PROPELLERS AND TOOLS



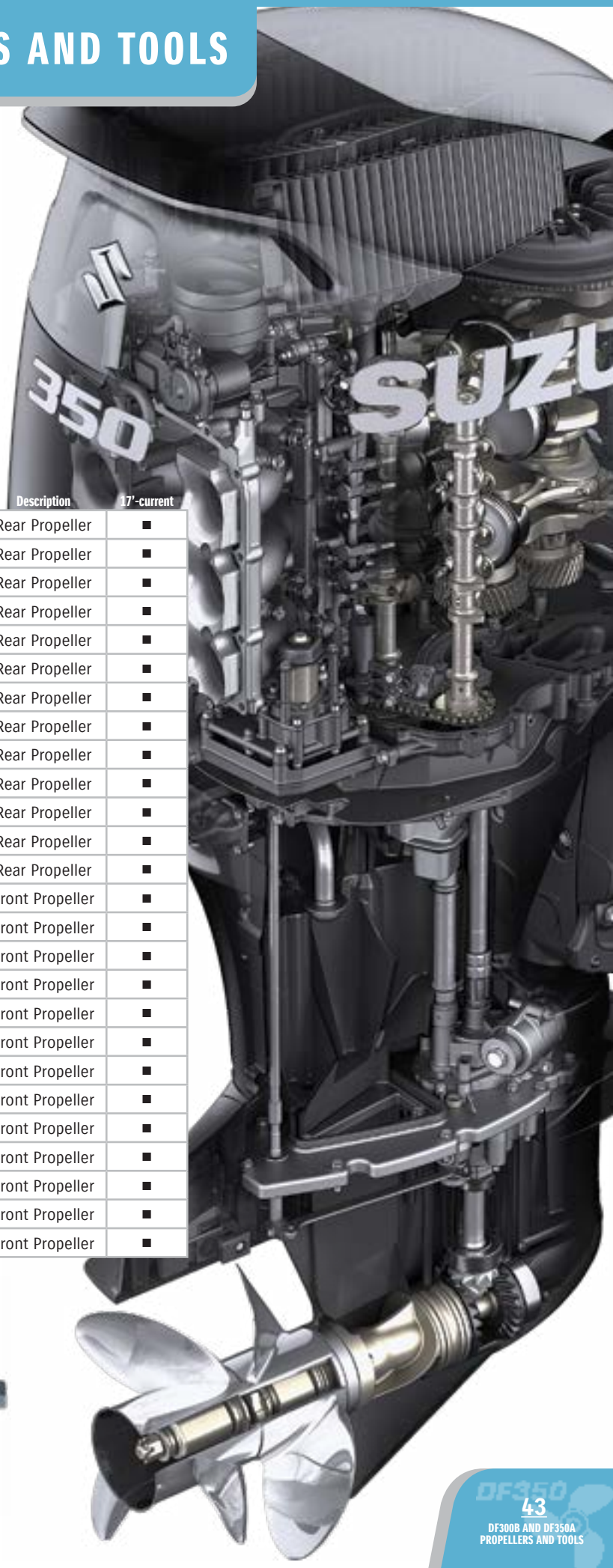

DF300B/DF350A Propellers

Material	Blades	Diameter	Pitch	Part Number	Description	17'-current
Stainless Steel	3	15-1/2"	12	990C0-0091R-12P	Rear Propeller	■
Stainless Steel	3	15-1/2"	15	990C0-0091R-15P	Rear Propeller	■
Stainless Steel	3	15-1/2"	16.5	990C0-0091R-165	Rear Propeller	■
Stainless Steel	3	15-1/2"	18	990C0-0091R-18P	Rear Propeller	■
Stainless Steel	3	15-1/2"	19.5	990C0-0091R-195	Rear Propeller	■
Stainless Steel	3	15-1/2"	21.0	990C0-0091R-21P	Rear Propeller	■
Stainless Steel	3	15-1/2"	22.5	990C0-0091R-225	Rear Propeller	■
Stainless Steel	3	15-1/2"	24.0	990C0-0091R-24P	Rear Propeller	■
Stainless Steel	3	15-1/2"	25.5	990C0-0091R-255	Rear Propeller	■
Stainless Steel	3	15-1/2"	27.0	990C0-0091R-27P	Rear Propeller	■
Stainless Steel	3	15-1/2"	28.5	990C0-0091R-285	Rear Propeller	■
Stainless Steel	3	15-1/2"	30.0	990C0-0091R-30P	Rear Propeller	■
Stainless Steel	3	15-1/2"	31.5	990C0-0091R-315	Rear Propeller	■
Stainless Steel	3	15-1/2"	12	990C0-0090F-12P	Front Propeller	■
Stainless Steel	3	15-1/2"	15	990C0-0090F-15P	Front Propeller	■
Stainless Steel	3	15-1/2"	16.5	990C0-0090F-165	Front Propeller	■
Stainless Steel	3	15-1/2"	18	990C0-0090F-18P	Front Propeller	■
Stainless Steel	3	15-1/2"	19.5	990C0-0090F-195	Front Propeller	■
Stainless Steel	3	15-1/2"	21.0	990C0-0090F-21P	Front Propeller	■
Stainless Steel	3	15-1/2"	22.5	990C0-0090F-225	Front Propeller	■
Stainless Steel	3	15-1/2"	24.0	990C0-0090F-24P	Front Propeller	■
Stainless Steel	3	15-1/2"	25.5	990C0-0090F-255	Front Propeller	■
Stainless Steel	3	15-1/2"	27.0	990C0-0090F-27P	Front Propeller	■
Stainless Steel	3	15-1/2"	28.5	990C0-0090F-285	Front Propeller	■
Stainless Steel	3	15-1/2"	30.0	990C0-0090F-30P	Front Propeller	■
Stainless Steel	3	15-1/2"	31.5	990C0-0090F-315	Front Propeller	■

DF300B/350A Propeller Removal Tool

99924-29810-LPT	Prop Tool



REPAIR KITS & ANODES





Water Pump Repair Kit

FOUR STROKE

Part Number	Application	Years
17400-986L2	DF4/6	'02 – '10
	DF4/6	'11 – Current
17400-99J02	DF9.9A	'10 – Current
17400-94J00	DF9.9/15	'07 – Current
17400-93951	DF9.9/9.9B/15/ 15A/20A	'97 – '06
17400-96354	DF25/30	'00 – '07
	DF40/50	'99 – '10
17400-94L21	DF25A/30A	'14 – Current
17400-95J03	DF25 V-Twin	'06 – Current
17400-99E01	DF60/70	'07 – '10
17400-87E04	DF60/70	'98 – '06
17400-88L01	DF40A/50A/60A	'10 – Current
17400-99E12	DF60AVT	9-1/4
17400-87L01	DF70A/80A/90A	'09 – Current
17400-92J00	DF90/115/140	'06 – '08
17400-90J20	DF90/115/140	'01 – '05
17400-92J21	DF115/115A/140A/ 150AP/175AP	'09 – Current
17400-96J04	DF150AP/175AP DF200A/200AP	'06 – Current
17400-93J04	DF200/225/250 (V6)	'04 – Current
17400-98J04	DF250SS	'08 – Current
	DF250AP/300/300A	'07 – Current
17400-98L02	DF300B/DF350A	All Models

TWO STROKE

17400-98652	DT4	'84 – '98
	DT5	'99 – '02
17400-98551	DT6	'84 – '02
	DT8	'86 – '97
	DT9.9	'85 – '87
	DT15C	'89 – '97
	DT15	'83 – '88
17400-92D01	DT8C/9.9C	'88 – '97
17400-96404	DT25C	'89 – '00
	DT30C	'88 – '97
17400-96354	DT20	'86 – '88
	DT25	'84 – '88
	DF25/30	'00 – '07
	DT30	'84 – '87
	DT35/40C	'83 – '98
17400-94701	DT55/65	'85 – '97
17400-95351	DT75/85	'85 – '00
17400-94611	DT115/140	'86 – '01
17400-94553	DT115/140	'83 – '85
17400-87D11	V6 2-Stroke Models	'86 – '03



Gear Case Seal Kit

Part Number	Application	Years
25700-95D03	DF25/30 (except V-Twin)	
25700-95J00	DF25 V-Twin	All
25700-88L03	DT40C/DF40/50/40A/50A/60A	All
25700-87E00	DF60/70 and V4 Models	'89 – '00
25700-99E00	DF60/70	'01 – '10
25700-87L00	DF70A/90A	'09 – Current
25700-90J01	DF90/115	All
25700-92J00	DF140	All
25700-93J00	DF150/175/200/200AP/225/250	All
25700-98J01	DF250SS/300	All
25700-93L02	DF250AP/300AP	All
25700-98L04	DF300B/350A	All
25700-95D01	DT25C/30C	All
25700-94700	DT55/65	All
25700-95501	DT75/85	All
25700-94500	DT115/140	All
25700-87D00	V6, 2-Stroke Models	'89 – '03



Carburetor Repair Kit

Part Number	Application	Years
13910-89J01	DF25/30 (except V-Twin)	All
13910-95D00	DT25/30C	All
13910-94400	DT40/65/85/140	All
13910-94701	DT55/75/115	All
13910-87D01	V6, 2-Stroke Models	All

ZINC ANODES FOR SALTWATER USE ONLY



11281-94400	DF60/70	‘98 – ‘01



55321-90L00	DF9.9/15	‘97 – ‘10



55125-90J01	DF90–140	‘98 – Current



55125-98J00-0EP	DF200/225/250/300	Trim Tab



55125-95500	DF40/50	‘99 – ‘10
	DF40A/50A/60A	‘10 – Current



55125-98J10	DF250SS	‘08 – Current



55125-93L00-0EP	DF250AP/300AP	‘13 - Current



55125-92J00	DF115/140	‘08 – Current



55125-96310	DF25/30	‘00 – ‘10
	DF25 V-Twin	‘06 – Current



55300-95500	DF9.9/15	‘04 – ‘10
		‘96 – ‘03
	DF40/50	‘99 – ‘10
	DF40A/50A/60A	‘10 – Current



55320-95311	DF25 /30	‘00 – ‘07
	DF40/50	‘99 – ‘08
	DF40A/50A/60A	‘10 – Current
	DF60/70	‘01 – ‘08
	DF150/175	‘06 – Current
	DF200/225/250/300	‘04 – Current



55320-94900	DF60 thru 300	‘01 – ‘10



55321-90J01	DF60–140	‘98 – ‘08



55321-939L0	DF9.9/15	‘97 – ‘08

MAGNESIUM ANODES FOR FRESHWATER USE ONLY



55321-87J11	DF8A/9.9A	‘10 – Current
	DF25 V-Twin	‘06 – Current
	DF40A/50A/60A	‘10 – Current
	DF70A/90A	‘09 – Current
	DF90/115	‘01 – ‘08
	DF115	‘09 – Current
	DF140	‘02 – Current
	DF150/175	‘06 – Current
	DF200/225/250	‘04 – Current
	DF300	‘07 – Current



55321-94910	DF60 thru 140	‘01 – ‘10
	DF150/175/200/ 225/250/300	‘06 – Current



55321-93J01*	DF300B/DF350A	All models
*Also requires P/N 09116-06236 (Bolt)		

ALUMINUM ANODES FOR BRACKISH AND/OR SALTWATER



55321-87J01	All Models	All Years

ECSTAR®

The Number One Engine Oil for Suzuki Owners or any boat owner that cares about performance and protection.

ECSTAR® Suzuki Genuine Semi-Synthetic Engine Oil is scientifically formulated by Suzuki to provide the Ultimate Outboard Motor with the protection it needs to run long and strong in the harsh marine environment.

- **Special Additives Help Protect Engines in Both Salt and Fresh Water Environments**
- **Advanced Detergents Keep Engine Parts Clean**
- **Viscosity Index Improvers Help Engines Start Easily in Cold Conditions**

ECSTAR® Suzuki Semi-Synthetic Marine Engine Oil exceeds NMMA FC-W requirements.

ECSTAR® Suzuki Genuine Oil is a proud sponsor of numerous professional and collegiate anglers in the Major League Fishing (MLF) Bass Pro Tour, B.A.S.S. Elite Angler Pro Tour, National Walleye Tour, and Collegiate Tour. The combination of speed, power and reliability of their SUZUKI engines matched with ECSTAR® Suzuki Genuine Oil keeps our anglers out in front of the competition and fully focused on what matters most – catching fish!

Pictured at right at is B.A.S.S. Elite Angler Brandon Card.




SUZUKI
ECSTAR
SUZUKI GENUINE OIL
ULTIMATE
BLACKFIS
VEXUS
SUZUKI
O-ZURI
THE BEST
Outdoors
STAR
GENUINE OIL
V7000
SEMI SYNTHETIC
10W-40
4T ENGINE OIL
MARINE
ECSTAR
1 Quart
(946ml)
V7000
SEMI SYNTHETIC
10W-40
4T ENGINE OIL
MARINE
ECSTAR
1 Gal.
(3.785L)

ECSTAR® OILS AND CHEMICALS



ECSTAR® Marine 4-Cycle Engine Oil

Ecstar V7000 Semi-Synthetic Oil is specifically formulated for the Ultimate Outboard Motor. Premium mineral oils and synthetic lubricants, with an additive profile designed to stand up to harsh conditions on the water. FC-W Certified. See chart for recommended oil filter and capacities.

990C0-01E30-QUA	1 QT. Bottle	12/Case
990C0-01E30-GLN	1 GL Bottle	4/Case
990C0-01E30-DRU	55 Gallon Drum	

Dealers: Engine Oil must be ordered separately from all Parts and Accessories. See Suzuki Connect for instructions.





Gear Lube Pump

The Gear Lube Pump is developed to make changing the gear case oil in your lower units a whole lot easier. The pump is specially designed to fit and function with our Hypoid Gear Oil bottles and Suzuki outboard lower units.

990C0-99001

Gear Oil Capacity

Model	Gear Case Oil Capacity (cc)	Gear Case Oil Capacity (oz)
DF4/6	190 ml.	6.4 oz.
DF9.9/15	175 ml.	5.9 oz.
DT9.9/15/15C	170 ml.	5.7 oz.
DF25/30	230 ml.	7.8 oz.
DF25V-Twin	420 ml.	14.2 oz.
DF40A/50A/60A/40/50	610 ml.	20.6 oz.
DF60/70	1050 ml.	35.5 oz.
DF70A/90A	850 ml.	28.7 oz.
DF90/115/140	1050 ml.	35.5 oz.
DF150/175/200/225/250/250S	1100 ml.	37.2 oz.
DF300	1100 ml.	37.2 oz.
DF300B/350A	3218 ml.	108.8 oz.
DT2/2.2 (Short Shaft)	70 ml.	2.4 oz.
DT2/2.2 (Long Shaft)	120 ml.	4.0 oz.
DT3.5	85 ml.	2.9 oz.
DT4	190 ml.	6.4 oz.
DT5/6/8	240 ml.	11.5 oz.
DT8C/9.9C/9.9CN	175 ml.	5.9 oz.
DT20/25/30/30C/35C	230 ml.	7.8 oz.
DT40	610 ml.	20.6 oz.
DT50/55/60/65	650 ml.	22.0 oz.
DT75/85	700 ml.	23.7 oz.
DT90/100	560 ml.	18.9 oz.
DT115/140	1100 ml.	37.2 oz.
DT150/175/200/225	1050 ml.	35.5 oz



Hypoid Gear Oil

Hypoid Gear Oil is formulated to Suzuki specifications. Available in two convenient sizes: 1 quart bottle and 5 gallon bucket. See chart for recommended gear oil capacities.

990A0-01E81-01Q	1 Quart	12/Case
990A0-01E81-05G	5 Gallon Bucket	



Fuel Conditioner & Water Remover

Removes water and helps clean fuel system. Helps to keep injectors and carburetors clean and corrosion free. Dissolves gum and varnish and helps prevent fuel line freezing. Use regularly for best result. 12oz bottle treats 3-12 gallons of gasoline.

990A0-02E30-12Z	12 Fluid oz. Bottle	12/Case



Spray Cleaner & Polish

Suzuki Spray Cleaner & Polish is the ultimate "detailer in a can". It cleans dirt, road contaminants, bugs, water spots and shipping preservatives without water, leaving a "showroom shine" that helps to protect against UV damage, ozone and dirt accumulation. *Not for Matte Black Finish on SS Models.

990A0-04E06-14Z	14 Fluid oz.	12/Case



Performance Low VOC Brake Cleaner

Blasts away brake fluid, dirt and contaminants quickly and easily with no residue. Helps stop annoying brake squeal and chatter. Cleans disc and drum assemblies, including springs, rotors and pads. Also works great on your boat trailer!

990A0-04E16-15Z	14 oz. Can	12/Case



Fuel Injector Cleaner

Quickly cleans deposits in gasoline injectors and helps to avoid costly injector replacement. Also helps prevent deposit build up with regular use and will not harm catalytic converters or oxygen sensors. Mix ratio 1:1, 12oz bottle treats 12 gallons of gasoline.

990A0-02E25-12Z	12 Fluid oz. Bottle	12/Case

Bond 1207B

1207B is used for sealing crankcases due to its outstanding resistance to heat and oil.

990A0-06E70-03Z	3.5 oz. Tube





Thread Locks

Prevents nuts and bolts from vibrating loose. Made with the same compounds used to assemble Suzuki Products at the factory. Four strengths for different applications. Easy to use and store in individual 10cc containers with different colors for quick identification.

990A0-06E33-10C	1333B Medium Strength Bearing and Stud Lock
990A0-06E03-10C	1303 High Strength Retaining Type
990A0-06E42-10C	1342 Low Strength Frequent Repair
990A0-06E60-10C	1360 Medium Strength High Temperature Type

MAINTENANCE AND CARE





Oil Filters And Capacities

Oil filter part numbers by engine model. Engine oil capacities are for reference only. Please consult your engine owners manual for oil change procedure.

Models	Filter Part Number	Oil Capacity w/out Filter L/QT	Oil Capacity w/Filter L/QT
DF9.9/15 '96 - '10	16510-05240*	1.0/1.1	1.1/1.2
DF9.9T/9.9TH/9.9B/15/15A/20A '11 ~ Current	16510-45H10	1.0/1.1	1.1/1.2
DF9.9A	16510-05240	.8/.85	.9/.95
DF25/30	16510-87J00	1.5/1.6	1.6/1.7
DF25V-Twin	16510-87J00	1.5/1.6	1.8/1.9
DF25A/30A	16510-87J00	1.5/1.6	1.6/1.7
DF40/50	16510-87J00	2.2/2.3	2.4/2.5
DF60/70	16510-87J00	4.5/4.8	4.8/5.1
DF40A/50A/60A	16510-87J00	2.7/3.0	2.9/3.2
DF70A/90A '09 -'10	16510-61A21-MHL	4.2/4.0	4.4/4.7
DF70A/90A '11 ~ Current	16510-61A31	4.2/4.0	4.4/4.7
DF90/115	16510-61A21-MHL	5.5/5.8	5.7/6.0
DF115A/140A	16510-61A31	5.5/5.8	5.7/6.0
DF140	16510-82703	5.5/5.8	5.7/6.0
DF150/175/200A	16510-96J10	8.0/8.5	8.5/9.0
DF200/225/250 ~ '07	16510-96J10	8.0/8.5	8.2/8.7
DF200/225/250/300	16510-96J10	8.0/8.5	8.2/8.7
DF300B/350A	16510-96J10	7.8/8.2	8.0/8.5

Recommended Oil Change Periods

1st 20 hours	Every 100 hours	Every 200 hours
Oil & Filter	**Oil**	**Oil & Filters**

Oil Change Necessities

Models	Drain Plug	Drain Plug/Gasket
DF2.5	09248-10008	09168-10022
DF4/6	09248-10008	09168-10022
DF9.9A	09248-12009	09168-12017
DF9.9B/15A/20A	09248-12009	09168-12017
DF25/30	09248-12009	09168-12012
DF25 V-Twin	09248-12009	09168-12012
DF25A/30A	09248-12009	09168-12017
DF40A/50A/60A	09248-12009	09168-12012
DF70A/90A	09248-12009	09168-12012
DF90/115/115A/140/140A	09248-12009	09168-12012
DF150/175/200A	09248-12009	09168-12012
V6 Models (Includes DF300B/350A)	09248-12009	09168-12012

Marine Maintenance Kits

Suzuki Genuine Parts & Accessories is excited to introduce our new Marine Maintenance Kits. These all inclusive kits contain everything necessary for performing the recommended service. We are offering 12 individual kits that are application-specific for each engine category.

Models	Part Number	Year
DF2.5	17400-97820	2006 – 2011
DF2.5	17400-97810	2012 – Current
DF4A/6A	17400-91890	2017 – Current
DF4/6	17400-91860	2002 – 2010
DF4/6	17400-91830	2011 – 2016
DF9.9A	17400-99840	2010 – Current
DF9.9/15	17400-94810	2011 – 2013
DF9.9B/15A/20A	17400-89810	2013 – Current
DF25/30	17400-89820	2001 – 2010
DF25 V-Twin	17400-95870	2006 – Current
DF25A/30A	17400-94820	2015 – Current
DF40/50	17400-87820	Late 2006 – 2010
DF40A/50A/60A	17400-88810	2010 – Current
DF60	17400-99850	Late 2009 Only
DF50AV/60AV	17400-88820	2014 Current
DF60/70	17400-99860	2008 – Early 2009
DF60/70	17400-99870	2007 Only
DF70A/80A/90A	17400-87810	2009 – Current
DF115	17400-92840	2010 – 2012
DF115A/140A/115SS	17400-92821	2013 – Current
DF140	17400-92850	2010 – 2012
DF150/175/150SS	17400-96822	2006 – Current
DF150A/175A/200A	17400-96830	2016 – Current
DF200/225/250 – V6	17400-93852	2011 – Current
DF250AP/300A/300AP/250SS	17400-98862	2011 – Current
DF300B/DF350A	17400-98870	2017 – Current
Kit Contents*	Oil Filter	
	Spark Plugs	
	Water Pump Kit	
	Fuel Filter	
	Water Pump Case Sleeve	
	Anodes	
	Cotter Pin	
	Gaskets	
	O-Ring	

*Kit contents will vary slightly by engine model..

Bulk Oil Filters

All Bulk Packs contain 24 oil filters. They are not individually wrapped. Only meant for service departments, not resale.

Bulk Pack Part Number	Oil Filter Part Number
16510-61831-B24	16510-61A31
16510-82803-B24	16510-82703
16510-87800-B24	16510-87J00
16510-96800-B24	16510-96J10
16510-96801-B24	



MAINTENANCE AND CARE





Flush Hose Attachment

See Owners Manual or Service Manual on how to use the flush attachments.

55181-95200	All 2-Stroke Models DF4 thru DF15 4 Stroke Models



Suzuki Super Grease

Multi-purpose, lithium grease is heat and water resistant, anti-wear.

99000-25480



Water Resistant Grease

Use on oil seal lips, links and joints of the engine that are below the waterline.

99000-25520	8.8 oz. Tube



Silicone Seal

A clear adhesive sealer with a silicone base.

93691-80030	3.5 oz. Tube

Spark Plugs

Models	Part Number	Spark Plug
DF2.5	09482-00406	CR6HSA
DF4/6 – '03 - '10	09482-00299	BPR6ES
DF4/6 – '11	09482-00L04	CR6EEA-9
DF9.9A	09482-00528	CR6E
DF9.9/15 – up to '04	09482-00446	DCPR6E
DF9.9/15 – '04-'10	09482-00427	BKR6E
DF9.9/15 – '11	09482-00L04	CPR6EA-9

Models	Part Number	Spark Plug
DF25A/30A	09482-00446	DCPR6E
DF25 V-TWIN	09482-00427	BKR6E
DF40/50	09482-00446	DCPR6E
DF60/70	09482-00299	BPR6ES
DF40A/50A/60A	09482-00446	DCPR6E
DF70A/90A	09482-00446	DCPR6E
DF90 and all DF115 and DF140	09482-00427	BKR6E
DF150/175	09482-00427	BKR6E
DF200A/200AP	09482-00649	LKR6E
DF200/225/250	09482-00427	BKR6E
DF250SS	09482-00427	BKR6E
DF300A	09482-00427	BKR6E
DF300B/DF350A	09482-00642	ILZKR7D8

Drain Plug Sealing Gaskets

Models	Part Number
59178-97J00	25/30A
09168-10022	40-140A (excluding 70/90)
09168-10034	70/90A, 150-350









Touch-Up Paint

If you need touch-up paint for your outboard, please visit www.colorrite.com.

Black Outboards	Code
Shadow Black Metallic	0EP
Nebular Black	YAY
Metallic Matte Black	YKV

White Outboards	Code
Super Cool White	QTN
Cool White	Y5S
Pearl Annivesary White	QUA

Other	Code
2 Stroke Charcoal	0ED
Warm Silver - DF300B/350A Trim	Y5S

ENGINE COVERS





Engine Covers

Custom-fit Engine Covers feature Sunbrella® UV resistant, water-repellent fabric and silk screened Suzuki graphics.

Sunbrella is a registered trademark of Glen Raven, Inc.

New Part Number	For	Application
990C0-65012	DF2.5	All Model years
990C0-65013	DF4A/6A	All Model years
990C0-65022	DF9.9A/9.9B/15A/20A	2012 - Current
990C0-65023	DF25A/30A	All Model years
990C0-65024	DF40A/50A/60A	2011 - Current
990C0-65001	DF40/50	2010 and prior
990C0-65026	DF70A/90A	2009 - Current
990C0-65027	DF115A/140A	2012 - Current
990C0-65004	DF140	2002 - 2011
990C0-65028	DF115BG/140BG	All Model years
990C0-65030	DF150/175	2006 - Current
990C0-65031	DF150AP/175AP/200A	Will not fit DF150/175
990C0-65032	DF225/250/250T	Will not fit DF250AP
990C0-65033	DF250AP/300/300AP	All Model years
990C0-65034	DF300B/350A	All Model years



Splash Covers

Suzuki vented Splash Covers are custom made, tight-fitting covers that are designed to protect the outboard engine cowlings and decals from sun, spray, salt, birds, errant fish hooks, and anything else that can compromise the factory finish while the engine is running. The Polysoft II fabric is a breathable, marine grade fabric that is 95% waterproof and 5% breathable which ensures that moisture will not be trapped under the cover. This 100% woven polyester fabric is UV stabilized to resist fading and rotting. The soft non-woven lining will not scuff or damage your cowling when installed. Splash Covers are easy to clean and will be sure to turn heads! Please note: all engine covers 150hp and up will have gray graphics, while all engine covers 140hp and below (including DF4/6 carry bag) will have red graphics.

Gray Graphics-Black Cover

990C0-66000-BLK	DF150SS/150/175
990C0-66002-BLK	DF150A/175A/200SS/200A
990C0-66003-BLK	DF250AP/300AP
990C0-66005-BLK	DF300B
990C0-66004-BLK	DF350A

Gray Graphics-White Cover

990C0-66005-WHT	DF300B
990C0-66004-WHT	DF350A

Red Graphics-Black Cover

990C0-67000-BLK	Carry bag for DF4A/6A
990C0-67001-BLK	DF90/115
990C0-67002-BLK	DF115SS/115A/140A
990C0-67003-BLK	DF140
990C0-66001-BLK	DF225/250 – V6

MARINE STYLE







SUZUKI APPAREL LINEUP



CASUAL BOATING APPAREL

MARINE STYLE





Men's Packable Rain Jacket

Huk 100% Water proof 100% wind proof quick drying breathability

990C0-15000-__	Black XSM, SML, MED, LRG, 1XL, 2XL, 3XL



Men's Black 1/4 Zip Pullover-Fleece

Huk Designed with anti-microbial treatment that inhibits and kills the growth of odor causing microorganisms

990C0-15001-__	Black XSM, SML, MED, LRG, 1XL, 2XL, 3XL



Men's Black Polo

Huk Performance Polo 90% Polyester 10% spandex

990C0-18001-__	Black XSM, SML, MED, LRG, 1XL, 2XL, 3XL



Men's White/Gray Lowpro Raglan Long Sleeve

Huk Long Sleeve performance fabric sun blocking +30 UPF, 90% polyester 10% spandex

990C0-16100-__	White/Gray XSM, SML, MED, LRG, 1XL, 2XL, 3XL



Men's Black/Gray Lowpro Raglan Long Sleeve

Huk Long Sleeve performance fabric sun blocking +30 UPF, 90% polyester 10% spandex

990C0-16101-__	Black/Gray XSM, SML, MED, LRG, 1XL, 2XL, 3XL



Women's Black Icon Long Sleeve Hoodie

Huk Long Sleeve Hoodie I.C.E. Technology anti-microbial sun blocking +30 UPF, 100% polyester

990C0-13000-__	Black XSM, SML, MED, LRG, 1XL, 2XL, 3XL



Women's Black Icon Long Sleeve

Huk Long Sleeve I.C.E. Technology anti-microbial sun blocking +30 UPF, 100% polyester

990C0-16102-__	Black XSM, SML, MED, LRG, 1XL, 2XL, 3XL



Black Trucker Hat

Huk mesh snap-back trucker cap

990C0-17200	Black One Size Fits Most



White Trucker Hat

Huk mesh snap-back trucker cap

990C0-17201	White One Size Fits Most

NEW HUK CO-BRANDED APPAREL



Suzuki Icon X Hoodie

Lightweight, moisture-wicking, flexible 90% polyester/10% spandex. The 100% polyester mesh panels on the sides enhance breathability.

990C0-13001-__	Erie XSM, SML, MED, LRG, 1XL, 2XL, 3XL



Suzuki Icon Camo Long Sleeve

Lightweight, moisture-wicking, flexible 90% polyester/10% spandex. The 100% polyester mesh panels on the sides enhance breathability.

990C0-16103-__	Northdrop XSM, SML, MED, LRG, 1XL, 2XL, 3XL



Suzuki Icon Short Sleeve

Lightweight, moisture-wicking, flexible 90% polyester/10% spandex. The 100% polyester mesh panels on the sides enhance breathability.

990C0-16200-__	Carolina Blue XSM, SML, MED, LRG, 1XL, 2XL, 3XL



REVERSE

Suzuki Americana Tee

The most comfortable tee on and off the water. 56% Cotton / 44% Polyester.

990C0-16275-___	Gray XSM, SML, MED, LRG, 1XL, 2XL, 3XL



REVERSE

Suzuki Tuna Flag Tee

The most comfortable tee on and off the water. 56% Cotton / 44% Polyester.

990C0-16276-___	Dark Blue XSM, SML, MED, LRG, 1XL, 2XL, 3XL



Men's Black Next Level Shorts

Huk performance shorts are anti-microbial, offer sun protection, and breathability. 55% cotton, 35% polyester, 10% spandex.

990C0-11000-__	Black SML, MED, LRG, 1XL, 2XL, 3XL



Men's Gray Next Level Shorts

Huk performance shorts are anti-microbial, offer sun protection, and breathability. 55% cotton, 35% polyester, 10% spandex.

990C0-11001-__	Gray SML, MED, LRG, 1XL, 2XL, 3XL

MARINE STYLE

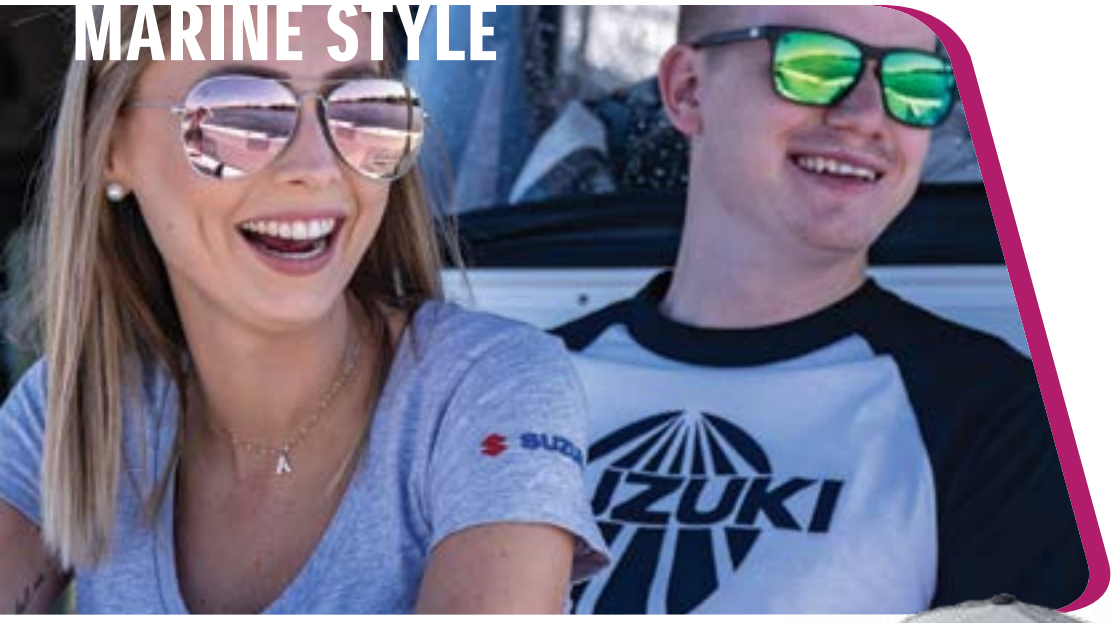



Vintage Trucker

The Suzuki Vintage Snap-back Hat features a black snap-back hat with the vintage Suzuki logo screen printed on the front panel. Order in quantities of 3.

990A0-17150	One Size Fits Most

Suzuki Marine Stretch-Fit Visor

The Stretch-Fit Visor is draped in Suzuki colors and features embroidered logos. This one-size fit most visor has an elastic band. Order in quantities of 3.

990C0-17005	White/Black
	S/M Stretch





Suzuki Mark Trucker Hat

This trucker-style hat is gray with a black bill and features a black Suzuki "S" patch sewn onto the front panel.

990A0-17107	Black/Red Logo
	One Size Fits Most



Suzuki Sideways Hat

3-D Embroidered Suzuki Logo. Order in quantities of 3.

990A0-17138	Suzuki Sideways Hat
	One Size Fits Most



3D Red "S" Gradation Cap

Flex-Fit X-Cap with 3D Red "S" Logo. Order in quantities of 3.

990A0-17107	Black/Red Logo
	One Size Fits Most



3D Blue "S" Gradation Cap

Flex-Fit X-Cap with 3D Blue "S" Logo. Order in quantities of 3.

990A0-17108	Black/Blue Logo
	One Size Fits Most



Women's Suzuki Stripes Tee

Women's crew t-shirt 60% Cotton 40% poly 4.3 oz combed ring-spun screen printed front and sleeve.

990A0-16256-__	Royal Blue
	SML, MED, LRG, 1XL



Ladies '86

100% Cotton. Tagless neck label. Screen-print on front.

990A0-16224-__	Gray
	SML, MED, LRG, 1XL





Suzuki Logo Tee

100% Ringspun Cotton. Screen-printed logo on front.

990A0-16242-___	Blue	990A0-16243-___	Black
	SML, MED, LRG, 1XL, 2XL		SML, MED, LRG, 1XL, 2XL



Suzuki Ecstar Polo

3.8 oz polyester tricot, snag resistent, mositure wicking, tag free label. Features and embroidered Suzuki logo on left chest and ECSTAR® logo on the left sleeve.

990A0-18127-___	Men's Black	SML, MED, LRG, 1XL, 2XL, 3XL
990A0-18128-___	Men's Blue	SML, MED, LRG, 1XL, 2XL, 3XL
990A0-18129-___	Men's Gray	SML, MED, LRG, 1XL, 2XL, 3XL
990A0-18130-___	Women's Black	SML, MED, LRG, 1XL
990A0-18131-___	Women's Blue	SML, MED, LRG, 1XL
990A0-18132-___	Women's Gray	SML, MED, LRG, 1XL

MARINE STYLE





Suzuki Big S

Black Men's crew T-shirt, 100% cotton 6 oz. Jersey, Screen printed front, side and sleeve

990A0-16281-___	Black
	MED, LRG, 1XL, 2XL



Suzuki Wedge

Royal/White, Men's 3/4 raglan, 50% poly, 25% cotton, 25% rayon, 4.3 oz, Screen printed front and back

990A0-16290-___	Royal/White
	MED, LRG, 1XL, 2XL



'S' Bar

The Suzuki S-Bar T-Shirt features a charcoal T-Shirt, with the Suzuki "S" screen printed on the chest. Suzuki logotype is printed on the bottom.

990A0-16247-___	Gray
	MED, LRG, 1XL, 2XL



Sun

Navy premium soft cotton T-Shirt with graphics screen printed on the front.

990A0-16246-___	Navy
	MED, LRG, 1XL, 2XL



Mechanics Shirts

65% Polyester, 35% Cotton. Features the SUZUKI logo embroidered on the left chest and Suzuki 'S' on right sleeve.

990A0-18112-_ _ _	Navy
	SML, MED, LRG, 1XL, 2XL, 3XL, 4XL
990A0-18113-_ _ _	Charcoal
	SML, MED, LRG, 1XL, 2XL, 4XL

MARINE STYLE





Hat Black

100% cotton twill with polymesh back

990A0-17160	Black



Beanie Black

100% Acrylic knit.

990A0-17181	Black



Beanie Gray

100% Acrylic knit.

990A0-17180	Gray



Suzuki Nested Logo Tee

60% cotton-40% polyester knit blend.

990A0-16265-___	Black
	SML, MED, LRG, 1XL, 2XL



Suzuki Center Red "S" Tee

60% cotton-40% polyester knit blend.

990A0-16266-___	Gray
	SML, MED, LRG, 1XL, 2XL



Suzuki Team

Royal Men's crew T-shirt, 100% cotton 6 oz. Jersey screen printed front, side and sleeve

990A0-16280-___	Royal
	MED, LRG, 1XL, 2XL



Suzuki Soft Shell Jacket

Navy Soft-Shell Jacket, 100% Polyester water resistant, micro fleece lining, scuba hood, media pocket, chest print and sleeve patch

990A0-15101-___	Navy
	MED, LRG, 1XL, 2XL



Suzuki Logo

Black hooded pullover sweatshirt, 80% cotton 20% poly, 7 0z. Mid-weight fleece, screen printed graphics.

990A0-15104-___	Black
	MED, LRG, 1XL, 2XL



Sublimated Polo Dark Gray

100% performance knit polyester.

990A0-18134-___	Gray
	SML, MED, LRG, 1XL, 2XL, 3XL



Logo Polo Black

100% performance knit polyester.

990A0-18135-___	Black
	SML, MED, LRG, 1XL, 2XL, 3XL



Suzuki UPF Sun Shirt Gray

100% performance knit polyester.

990A0-16267-___	Gray
	SML, MED, LRG, 1XL, 2XL



Softshell Jacket

100% polyester bonded waterproof shell.

990A0-15100-_ _ _	Black
	MED, LRG, 1XL, 2XL

GIFTS AND COLLECTIBLES





Suzuki Key Fobs

Made of flexible rubber, Key Fob features the Suzuki Corporate Logo. Dealers order in packs of 3.

990A0-19113	Suzuki 'S' Logo
990A0-19112	Suzuki Logo



Suzuki Coffee Mug

This 16 oz Mug features an extra large comfort-grip handle.

990A0-99184



Suzuki Umbrella

Protect yourself from the weather with a Suzuki Umbrella.

990A0-99178



Suzuki Logo Can Koozie

Keep your favorite drink cold in this Suzuki Can Koozie! Sublimated Suzuki Logo resists fading or chipping.

990A0-19206



Suzuki Shelter

Protect yourself and your gear from the elements while outside. These canopies feature durable canvas covers, aluminum frames, and silk screened Suzuki branding. When you're ready to pack it up for the day, simply fold it down and store them in their own canvas carrying case.

990A0-99279	



Suzuki Tables

Perfect for any garage or shop, Suzuki branded tables feature chrome plated steel tubing and melamine coated tops.

990A0-96383	Suzuki Logo Table
990A0-99387	Ecstar Logo Table



Suzuki Stools

Dress up your garage or shop with these comfortable padded stools. Each stool is covered in an easy to clean vinyl material and features Suzuki branding and are constructed using chrome plated steel tubing.

990A0-95525	Suzuki Logo Stool
990A0-95529	Ecstar Logo Stool



Garage & Shop Mats

Light and strong 100% olefin carpet pil with non-skid vinyl backing and 1-inch tapered border. 36 inch x 60 inch

990A0-95535	Suzuki Logo Mat
990A0-95539	Ecstar Logo Mat

GIFTS AND COLLECTIBLES



Suzuki Logo Die-Cut Decals

Thermal die-cut vinyl Official Suzuki Logo available in sizes from 4” to 20”. Dealers order in packs of 5.

99950-19245-MED	Suzuki Logo	12”
99950-19245-LRG	Suzuki Logo	20”



Suzuki Merchandise Bags

Available in your choice of paper or plastic with Suzuki graphics in 500 piece packages.

99950-19371	Paper	12” H x 6” W
99950-19372	Plastic	13” H x 12” W



Suzuki String Pennant

50 foot String Pennants are made with a durable 4mm vinyl.

990A0-99303-WHT	50' String Pennant



Vinyl Banners

Suzuki banners are a great way to increase the presence of Suzuki in and outside of your dealership. They are also great for events.

990A0-99301-WHT	4' x 20'
990A0-99302-WHT	3' x 10' Banner



Suzuki Logo Decals

Suzuki Decals are made with durable 15 mil, UV resistant coated vinyl decals. All Decals are sold in QTYs of 1.

990A0-99290-006	6"
990A0-99290-012	12"
990A0-99290-024	24"
990A0-99290-048	48"

APPLICATION CHART









DF4/6 (‘03 – Current)

Side Mount Control Box	**67200-94J33**	
Remote Control Attaching Kit	**67130-91J02**	
Rectifier Set	**32801-91J01**	
Water Pump Repair Kit	**17400-986L2**	‘03 – ‘10
	17400-986L2	‘11 – Current
Battery Charging Kit	**32000-91J03**	
Receptacle	**39600-91J00**	
Spark Plug BPR6ES	**09482-00299**	‘03 – ‘10
CPR6EA-9	**09482-00L04**	‘11 – Current

DF9.9A (‘10 – Current)

Side Mount Control Box	**67200-91J32**	
Remote Control Attaching Kit	**67130-99J02**	
Water Pump Repair Kit	**17400-99J02**	
Electric Starter Set	**31000-99J00**	
Battery Charging Kit	**32000-99J00**	
Oil Filter	**16510-05240**	‘10
	16510-45H10	‘11 – Current
Drag Link	**67701-99J02**	
Propeller Hardware Kit	**57630-99J00**	
Spark Plug CR6E	**09482-00528**	

*Clamp Bracket Set 41100-99J00-0EP required to install.

DF9.9/15 (‘96 – Current)

Side Mount Control Box	**67200-91J32**	‘05 – Current
Remote Control Attaching Kit	**67130-94J12**	‘05 – Current
Remote Control Cables	**990C0-11002-0XX***	2 req’d
Harness, Remote Control	**36630-89E02*** **	‘96 – ‘04
Main Harness	**36620-89L00**	‘05 – Current
Water Pump Repair Kit	**17400-93951**	‘96 – ‘06
	17400-94J00	‘07 – Current
Steering Bracket Attachment	**67720-93E00**	
Tilt-Tube Attachment	**41141-89E00**	
Rectifier Set	**32800-95D02**	‘96 – ‘04
	32800-94J11	‘05 – Current
Rectifier Regulator	**32801-94J01**	‘05 – Current
Battery Charging Kit	**32000-94J02**	‘05 – Current
Choke Solenoid	**38610-93E00**	‘96 – ‘04
Bolts	**01550-06167**	2 req’d
Starter Motor Set Stator, 120W	**31101-95D20-0EP**	‘96 – ‘03
	31100-94J22	‘05 – Current
	32120-94J10	‘06 – Current
Flywheel, Ring Gear Type	**32102-94J10**	‘05 – Current
Propeller Hardware Kit	**57630-93900**	
Drag Link Assembly	**67701-93E12**	‘97 – Current
Spark Plug DCPR6E	**09482-00446**	up to ‘04
BKR6E	**09482-00427**	‘04 – Current
CPR6-EA-9	**09482-00L04**	‘11 – Current
Oil Filter DF9.9/15	**16510-05240**	‘96 – Current
DF9.9T/15	**16510-45H10**	‘11 – Current



DF9.9B/15A/20A ('12 – Current)

Side Mount Control Box	**67200-94J33**	
Single Binnacle Kit	**67000-88L03**	
Flush Mount Kit	**67000-93JN0**	
Remote Control Attaching Kit	**67130-95J04**	DF9.9B/15A
	67130-89L08	DF20A
Remote Control Cables	**990C0-11002-0XX***	2req'd
Single Binnacle	**67200-88L01**	
Flush Mount	**67200-93J34**	
Wire Harness 16'	**36620-93J54**	
Wire Harness 21'	**36620-93J04**	
Wire Harness 26'	**36620-93J64**	
Ignition Sw. Panel Assy.	**37100-96J01**	
Ing. Sw. Emg. Stop/Buzzer	**37100-96J27**	
Warning Buzzer	**38500-92X52**	
Emergency Stop Assy.	**37803-93J06**	
Water Pump Repair Kit	**17400-94J00**	
Drag Link Kit	**67700-95J01**	
Propeller Hardware Kit	**57630-93900**	
Spark Plug MR6K-9	**09482-00661**	11-Current

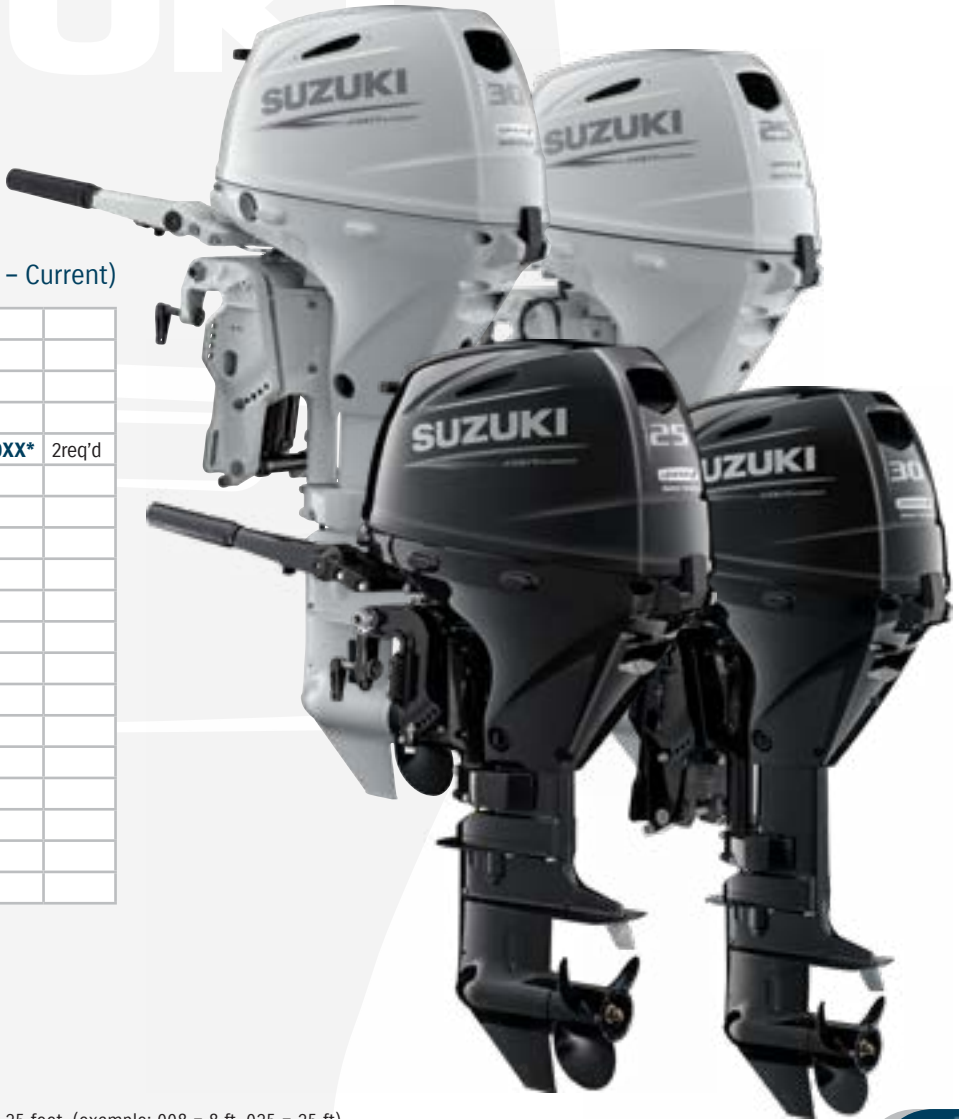

DF25A/30A ('06 – Current)

Side Mount Control Box	**67200-91J32**	
Single Binnacle Kit	**67000-88L03**	
Flush Mount Kit	**67000-93JN0**	
Remote Control Attaching Kit	**67130-95J04**	
Remote Control Cables	**990C0-11002-0XX***	2req'd
Single Binnacle	**67200-88L01**	
Dual Binnacle	**67200-88L11**	
Flush Mount	**67200-93J34**	
Wire Harness 16'	**36620-93J54**	
Wire Harness 21'	**36620-93J04**	
Wire Harness 26'	**36620-93J64**	
Ignition Sw. Panel Assy.	**37100-96J01**	
Ing. Sw. Emg. Stop/Buzzer	**37100-96J27**	
Warning Buzzer	**38500-92X52**	
Emergency Stop Assy.	**37803-93J06**	
Water Pump Repair Kit	**17400-95J03**	
Drag Link Kit	**67700-95J01**	
Propeller Hardware Kit	**57630-96300**	
Spark Plug BKR6E	**09482-00427**	

Specific Application Notes:
* Cable is available in one foot increments from 8 to 25 feet. (example: 008 = 8 ft, 025 = 25 ft)
** Must use with one of the following Main Harnesses: 16': 36620-93J52 21': 36620-93J02 25': 36620-93J62
*** Under-Hood Electric Start Harness

APPLICATION CHART



DF70A/90A (‘09 – Current)

Side Mount Control Box	**67200-93J62**	
Single Binnacle Kit	**67000-88L03**	
Dual Binnacle Kit	**67000-88L13**	
Flush Mount Kit	**67000-93JN0**	
Remote Control Cables	**990C0-11002-0XX***	2 req’d
Single Binnacle	**67200-88L01I**	
Dual Binnacle	**67200-88L11**	
Flush Mount	**67200-93J34**	
Wire Harness 16’	**36620-93J54**	
Wire Harness 21’	**36620-93J04**	
Wire Harness 26’	**36620-93J64**	
Power Trim/Tilt Sw.	**37805-93J00**	
Ignition Sw. Panel Assy.	**37100-96J01**	
Dual Ign. Sw. Panel Assy	**37100-96J17**	
Ing. Sw. Emg. Stop/Buzzer	**37100-96J27**	
Warning Buzzer	**38500-92X52**	
Emergency Stop Assy.	**37803-93J06**	
Dual Engine Tie Bar	**990C0-10006**	
Water Pump Repair Kit	**17400-87L04**	
Tiller Handle Kit	**63002-87L09-0EP**	‘09 – Current
Tiller Handle Kit with Tach	**63002-87L18-YAY**	
Drag Link Kit	**67701-87L01**	
Propeller Hardware Kit	**57630-90J00**	
Spark Plug DCPR6E	**09482-00446**	

DF40A/50A/50AV/60A/60AV (‘10 – Current)

Side Mount Control Box	**67200-93J62**	
Single Binnacle Kit	**67000-88L03**	
Dual Binnacle Kit	**67000-88L13**	
Flush Mount Kit	**67000-93JN0**	
Remote Control Cables	**990C0-11002-0XX***	2 req’d
Single Binnacle	**67200-88L01**	
Dual Binnacle	**67200-88L11**	
Flush Mount	**67200-93J34**	
Wire Harness 16’	**36620-93J54**	
Wire Harness 21’	**36620-93J04**	
Wire Harness 26’	**36620-93J64**	
Power Trim/Tilt Sw.	**37805-93J00**	
Ignition Sw. Panel Assy.	**37100-96J01**	
Dual Ign. Sw. Panel Assy	**37100-96J17**	
Ing. Sw. Emg. Stop/Buzzer	**37100-96J27**	
Warning Buzzer	**38500-92X52**	
Emergency Stop Assy.	**37803-93J06**	
Dual Engine Tie Bar	**990C0-10006**	
Steering Tensioner	**43770-99E03**	
Water Pump Repair Kit	**17400-88L00**	
Tiller Handle Kit	**63002-88L33-0EP**	
Tiller Handle Kit with Tach	**63002-88L29-YAY**	DF40A/50A
	63002-88L18-YAY	DF60A
Drag Link Kit	**67701-87J11**	
Propeller Hardware Kit	**57630-94301**	
	57630-90J00	DF50AV/60AV
Spark Plug DCPR6E	**09482-00446**	



DF115/140/115A/140A/115SS ('01 - Current)

Side Mount Control Box	**67200-93J62**	
Single Binnacle Kit	**67000-88L03**	
Dual Binnacle Kit	**67000-88L13**	
Flush Mount Kit	**67000-93JN0**	
Remote Control Cables	**990C0-11002-0XX***	2 req'd
Single Binnacle	**67200-88L01**	
Dual Binnacle	**67200-88L11**	
Flush Mount	**67200-93J34**	
Wire Harness 16'	**36620-93J54**	
Wire Harness 21'	**36620-93J04**	
Wire Harness 26'	**36620-93J64**	
Power Trim/Tilt Sw.	**37805-93J00**	
Ignition Sw. Panel Assy.	**37100-96J01**	
Dual Ign. Sw. Panel Assy	**37100-96J17**	
Ing. Sw. Emg. Stop/Buzzer	**37100-96J27**	
Warning Buzzer	**38500-93J90**	'01 – '04
	38500-92X52	'05 – Current
Emergency Stop Assy.	**37803-93J06**	
Dual Engine Tie Bar	**990C0-10006**	
Water Pump Repair Kit Tiller Handle Kit	**17400-92J23**	
	63002-90J41-0EP	
Tiller Handle Kit with Tach	**63002-90J38-YAY**	DF115A
Drag Link Kit	**67701-90J01**	'01 – '10
Propeller Hardware Kit	**57630-90J00**	
Spark Plug BKR6E	**09482-00427**	
Propeller Hardware Kit	**57630-90J00**	
Spark Plug BKR6E	**09482-00427**	

DF150A/150SS/175A/200A/200SS

Side Mount Control Box	**67200-93J62**	
Single Binnacle Kit	**67000-88L03**	
Dual Binnacle Kit	**67000-88L13**	
Flush Mount Kit	**67000-93JN0**	
Remote Control Cables	**990C0-11002-0XX***	2 req'd
Single Binnacle	**67200-88L01**	
Dual Binnacle	**67200-88L11**	
Flush Mount	**67200-93J34**	
Wire Harness 16'	**36620-93J54**	
Wire Harness 21'	**36620-93J04**	
Wire Harness 26'	**36620-93J64**	
Power Trim/Tilt Switch	**37805-93J00**	
Ignition Switch Panel Assy.	**37100-96J01**	
Dual Ignition Switch Panel Assy.	**37100-96J17**	
Ignition Switch w/ Emerg. Stop Buzzer	**37100-96J27**	
Warning Buzzer	**38500-92X51**	
Emergency Stop Assembly	**37803-93J06**	
Water Pump Repair Kit	**17400-88L01**	
Drag Link Kit	**67701-96J00**	
Propeller Hardware Kit	**57630-92E00**	
Spark Plug BKR6E	**09482-00427**	



Specific Application Notes:
* Cable is available in one foot increments from 8 to 25 feet. (example: 008 = 8 ft, 025 = 25 ft)
** Must use with one of the following Main Harnesses: 16': 36620-93J52 21': 36620-93J02 25': 36620-93J62
*** Under-Hood Electric Start Harness

APPLICATION CHART

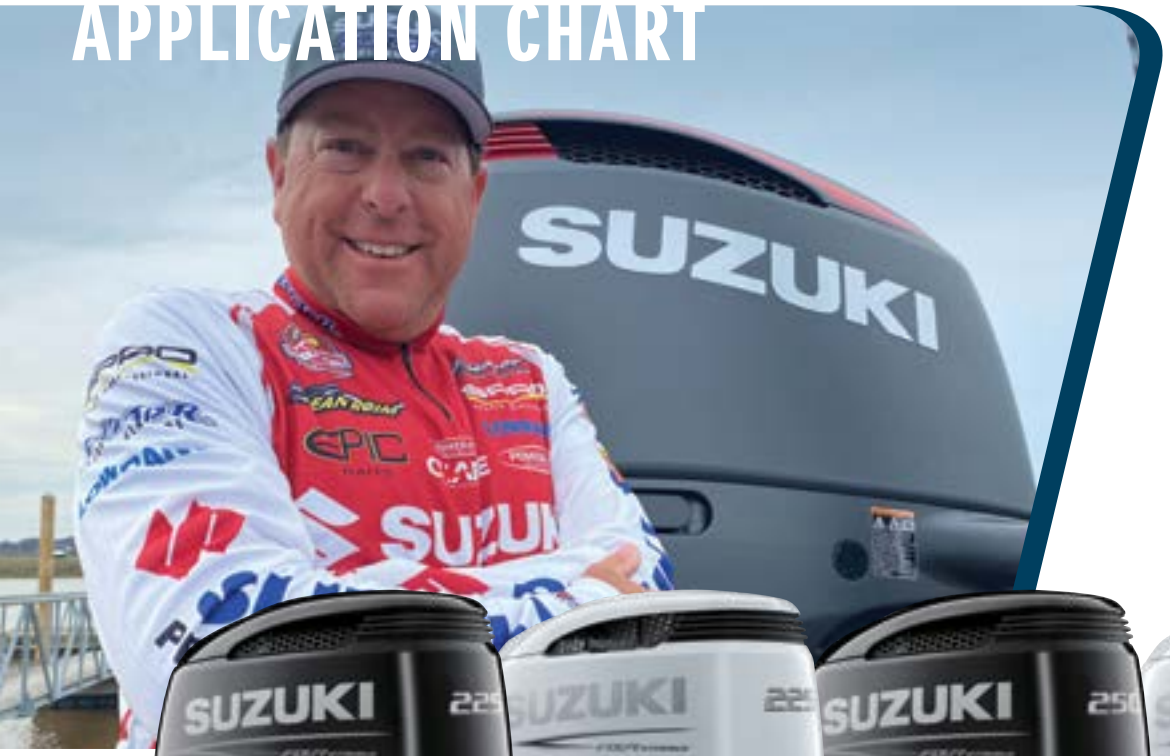



DF225/250 ('04 – Current)

Side Mount Control Box	**67200-93J62**	
Single Binnacle Kit	**67000-88L03**	
Dual Binnacle Kit	**67000-88L13**	
Flush Mount Kit	**67000-93JN0**	
Remote Control Cables	**990C0-11002-0XX***	2 req'd
Single Binnacle	**67200-88L01**	
Dual Binnacle	**67200-88L11**	
Flush Mount	**67200-93J34**	
Wire Harness 16'	**36620-93J54**	
Wire Harness 21'	**36620-93J04**	
Wire Harness 26'	**36620-93J64**	

Power Trim/Tilt Sw.	**37805-93J00**	
Ignition Sw. Panel Assy.	**37100-96J01**	
Dual Ign. Sw. Panel Assy	**37100-96J17**	
Ing. Sw. Emg. Stop/Buzzer	**37100-96J27**	
Warning Buzzer	**38500-92X52**	
Emergency Stop Assy.	**37803-93J06**	
Water Pump Repair Kit	**17400-93J04**	
Drag Link Kit	**67700-93J00**	
Propeller Hardware Kit	**57630-92E00**	
Spark Plug BKR6E	**09482-00427**	



DF250SS ('08 – Current)

Side Mount Control Box	**67200-93J62**	
Single Binnacle Kit	**67000-88L03**	
Dual Binnacle Kit	**67000-88L13**	
Flush Mount Kit	**67000-93JN0**	
Remote Control Cables	**990C0-11002-0XX***	2 req'd
Single Binnacle	**67200-88L01**	
Dual Binnacle	**67200-88L11**	
Flush Mount	**67200-93J34**	
Wire Harness 16'	**36620-93J54**	
Wire Harness 21'	**36620-93J04**	
Wire Harness 26'	**36620-93J64**	
Power Trim/Tilt Sw.	**37805-93J00**	
Ignition Sw. Panel Assy.	**37100-96J01**	
Dual Ign. Sw. Panel Assy	**37100-96J17**	
Ing. Sw. Emg. Stop/Buzzer	**37100-96J27**	
Warning Buzzer	**38500-92X52**	
Emergency Stop Assy.	**37803-93J06**	
Water Pump Repair Kit	**17400-98J04**	
Drag Link Kit	**67700-93J00**	
Propeller Hardware Kit	**57630-92E00**	
Gear Case Seal Kit	**25700-98J01**	
Spark Plug BKR6E	**09482-00427**	

DF115BG/140BG/150AP/175AP/200AP

Single Engine Binnacle First Station Kit	**67000-98L00**
Single Engine Binnacle Second Station Kit	**67000-98LA0**
Dual Engine First Station Kit	**67000-98L20**
Dual Engine Second Station Kit	**67000-98LC0**
Triple Engine First Station Kit	**67000-98L30**
Triple Engine Second Station Kit	**67000-98LD0**
Quad Engine First Station Kit	**67000-98L40**
Quad Engine Second Station Kit	**67000-98LE0**
Flush Mount Station Kit	**67000-98L10**
Remote Control Assembly, Single	**67200-98L00**
Remote Control Assembly, Multi	**67200-98L10**
Remote Control Assembly, Flush	**67200-98L20**
Vertical Switch Panel	**37100-98L10**
Horizontal Switch Panel	**37100-98L20**
Modular Ignition Panel	**37100-98L00**
Emergency Stop Switch	**37803-98L00**
Water Pump Repair Kit	**17400-96J04**
Gear Case Seal Kit	**25700-93J00**
Drag Link Kit	**67701-96J00**
Propeller Hardware Kit (DF115BG/ DF140BG)	**57630-90J00**
Propeller Hardware Kit (DF150AP/175AP/200AP)	**57630-93L00**
Spark Plug BKR6E (DF115BG/DF140BG)	**09482-00427**
Spark Plug LKR6E (DF150AP/175AP/200AP)	**09482-00649**



Specific Application Notes:

* Cable is available in one foot increments from 8 to 25 feet. (example: 008 = 8 ft, 025 = 25 ft)

** Must use with one of the following Main Harnesses: 16': 36620-93J52 21': 36620-93J02 25': 36620-93J62

*** Under-Hood Electric Start Harness

APPLICATION CHART



DF250AP/300AP

Single Engine First Station Kit	**67000-98L00**
Single Engine Second Station Kit	**67000-98LA0**
Dual Engine First Station Kit	**67000-98JG6**
Dual Engine Second Station Kit	**67000-98LC0**
Triple Engine First Station Kit	**67000-98JJ5**
Triple Engine Second Station Kit	**67000-98JK4**
Quad Engine First Station Kit	**67000-98L40**
Quad Engine Second Station Kit	**67000-98LE0**
Flush Mount Station Kit	**67000-98L10**
Remote Control Assembly, Single	**67200-98J06**
Remote Control Assembly, Multi	**67200-98J15**
Remote Control Assembly, Flush	**67200-98J24**

Panel Assembly, Single		**37100-98J11**
Panel Assembly, Dual		**37120-98L00**
Panel Assembly, Triple		**37120-98L10**
Main Power Key Switch Assembly		**37100-98J07**
Panel Assembly, Emergency Stop		**37803-93J06**
Warning Buzzer Assembly		**38500-92X52**
Water Pump Repair Kit	250AP	**17400-98J04**
	300AP	**17400-98J04**
Gear Case Seal Kit		**25700-98J01**
Drag Link Kit		**67700-93J00**
Propeller Nut Kit		**57630-92E00**
Spark Plug BKR6E		**09482-00427**



DF300B/350A

Single Engine First Station Kit	**67000-98L00**
Single Engine Second Station Kit	**67000-98JF6**
Dual Engine First Station Kit	**67000-98JG6**
Dual Engine Second Station Kit	**67000-98LC0**
Triple Engine First Station Kit	**67000-98JJ5**
Triple Engine Second Station Kit	**67000-98JK4**
Quad Engine First Station Kit	**67000-98L40**
Quad Engine Second Station Kit	**67000-98LE0**
Flush Mount Station Kit	**67000-98L10**
Remote Control Assembly, Single	**67200-98J04**
Remote Control Assembly, Multi	**67200-98J14**
Remote Control Assembly, Flush	**67200-98J24**

Panel Assembly, Single		**37100-98J11**
Panel Assembly, Dual		**37120-98L00**
Panel Assembly, Triple		**37120-98L10**
Main Power Key Switch Assembly		**37100-98J07**
Panel Assembly, Emergency Stop		**37803-93J06**
Warning Buzzer Assembly		**38500-92X52**
Water Pump Repair Kit		**17400-98L02**
Gear Case Seal Kit		**25700-98L04**
Propeller Nut Kit	Front	**58540-98L01**
	Rear	**58540-98L01**
Spark Plug	ILZKR7D8	**09482-00642**

NOTES

NOTES

MECHANICAL AND DIGITAL CONTROLS

CABLES AND RIGGING

FUEL SYSTEM

PROPS

INSTRUMENTS AND GAUGES

REPAIR AND MAINTENANCE KITS

ECSTAR® OIL AND CHEMICALS

ENGINE COVERS

SUZUKI STYLE APPAREL

All information, illustrations, photographs and specifications contained in this catalog are based on the latest product information available at the time of publication. Due to improvements or other changes, there may be some discrepancies in this brochure. Suzuki reserves the right to make production changes at any time, without notice and without incurring any obligation to make the same or similar changes to accessories previously built or sold.

Note: Some items may require installation by an Authorized Suzuki Marine Dealer.

SUZUKI MARINE

SUZUKI MARINE USA, LLC
13521 Prestige Place, Tampa, FL 33635
www.suzukimarine.com | www.suzuki.com

©Suzuki Marine USA, LLC 2022 Printed in USA, Jan. 2022 / Part Number 990C0-12022